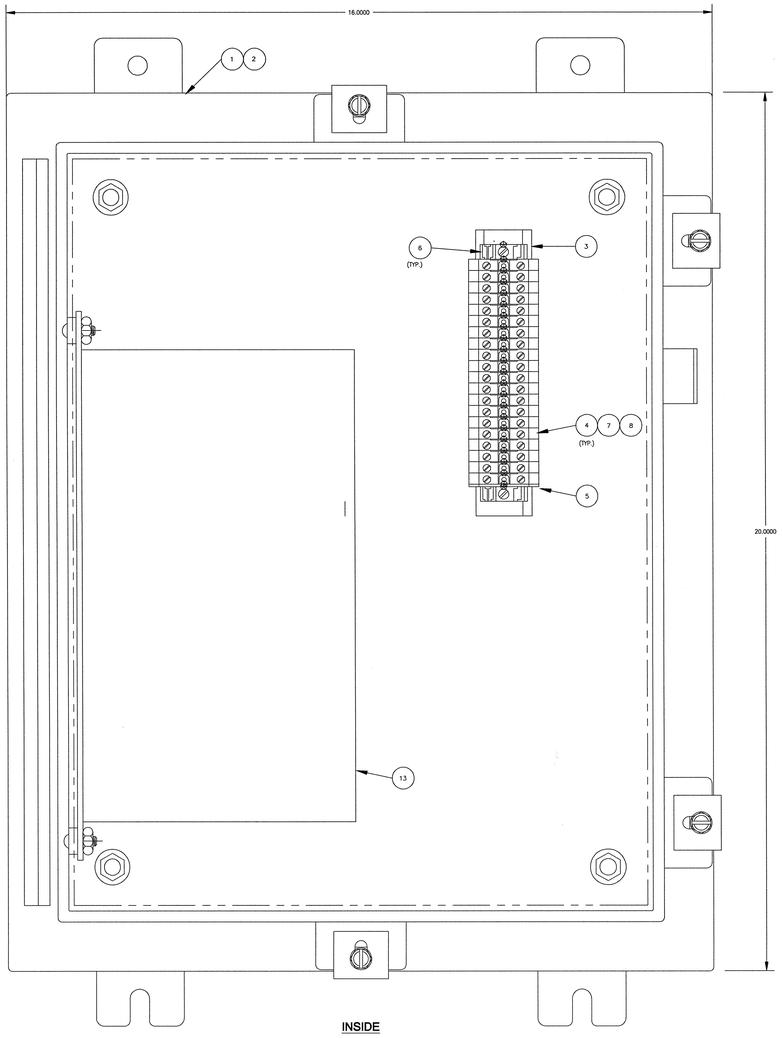

INSIDE

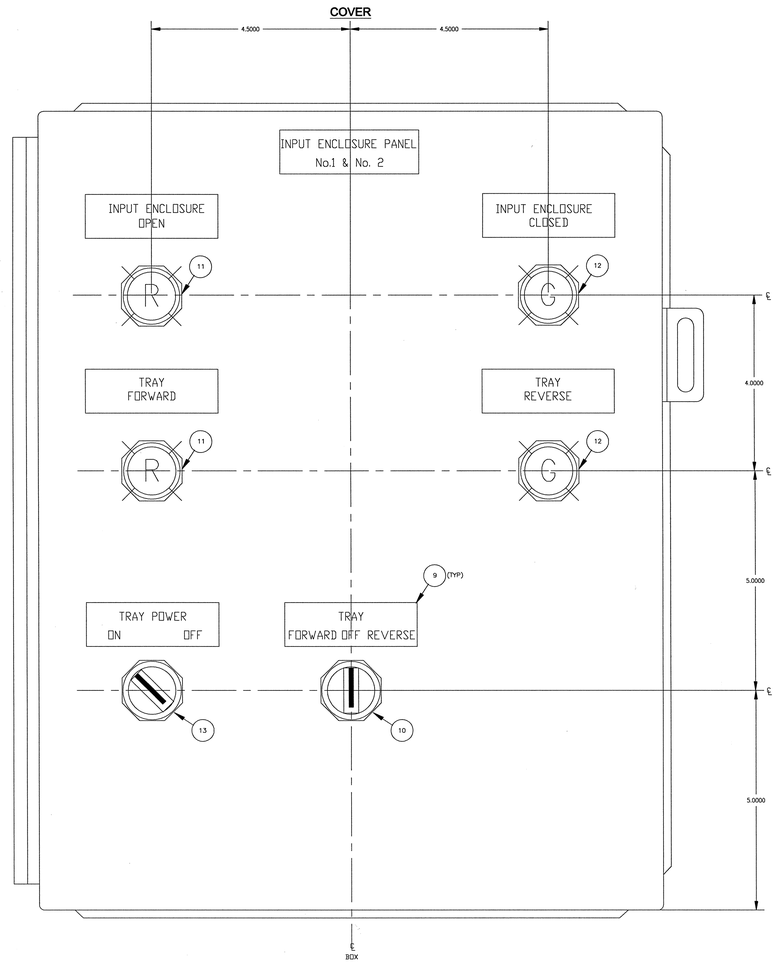

BILL OF MATERIALS				
ITEM	QTY	DESCRIPTION	MANUFACTURER	PART No.
1	1	ENCLOSURE NEMA 4X, SS 316 20"Hx16"Wx6"D	HOFFMAN	A-20H1608SS6LP
2	1	ENCLOSURE PANEL, SS 316 17"Hx13"W	HOFFMAN	A-20P1608SS6
3	A/R	TERMINAL MOUNTING RAIL	WEIDMULLER	12280
4	18	TERMINAL BLOCK SAK4	WEIDMULLER	12836
5	1	END PLATE	WEIDMULLER	27956
6	2	END BRACKET EWK1	WEIDMULLER	20616
7	1	PREFIXED TAGS (1-50)	WEIDMULLER	473460001
8	1	PREFIXED TAGS (51-100)	WEIDMULLER	473460051
9	7	NAMEPLATE, SS316, 3/16" THK 1"Hx3"W	-	-
10	1	SEL. SW., NEMA 4X, 3-POS. SPRG. RET.TO OFF, 1-NO/1-NC	ALLEN-BRADLEY	800H-JR91A
11	2	RED INDICATING LAMP	ALLEN-BRADLEY	800H SERIES
12	2	GREEN INDICATING LAMP	ALLEN-BRADLEY	800H SERIES
13	1	STEPPER DRIVE*	PACIFIC SCIENTIFIC	6445

* PROVIDED BY OTHERS.
MOUNTING HARDWARE BY
PANEL VENDOR.

NOTES:

1. ALL MATERIALS AND WORKMANSHIP SHALL CONFORM TO CSI SECTION 16000 AND ALL SUB-SECTIONS.
2. CIRCUIT NUMBERS SHOWN ARE FOR TWO PANELS.

WIRING DIAGRAM

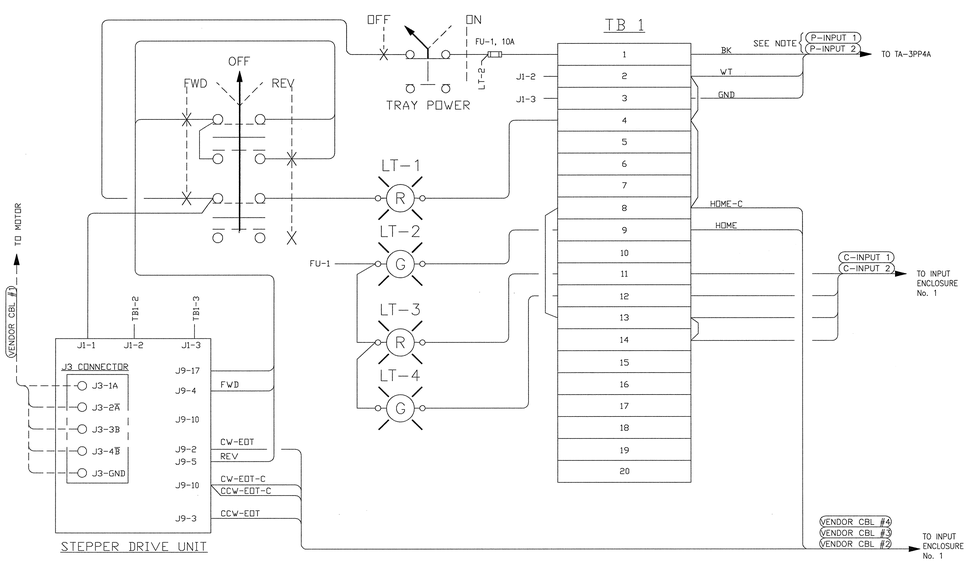

STEPPER DRIVE UNIT

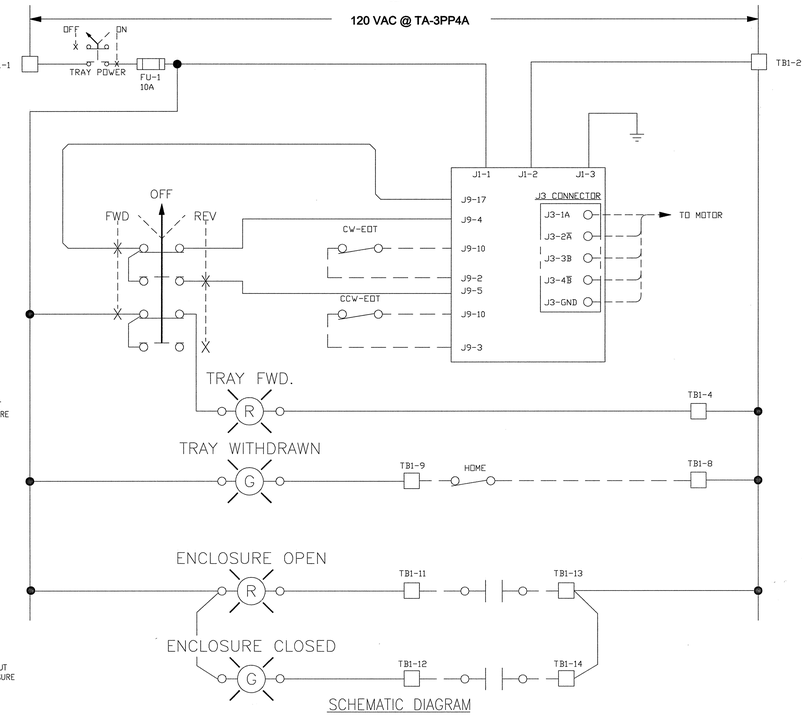

SCHEMATIC DIAGRAM

NO REPRESENTATION OR WARRANTY, EXPRESSED OR IMPLIED, IS MADE AS TO THE ACCURACY, COMPLETENESS OR USEFULNESS OF THE INFORMATION OR STATEMENTS CONTAINED IN THESE DRAWINGS, OR THAT THE USE OR DISCLOSURE OF ANY INFORMATION, APPARATUS, METHOD, OR PROCESS DISCLOSED IN THESE DRAWINGS MAY NOT INFRINGE PRIVATE RIGHTS OF OTHERS. NO LIABILITY IS ASSUMED WITH RESPECT TO THE USE OF, OR FOR DAMAGES RESULTING FROM THE USE OF ANY INFORMATION, APPARATUS, METHOD, OR PROCESS DISCLOSED IN THESE DRAWINGS. DRAWINGS MADE AVAILABLE FOR INFORMATION TO BIDDER ARE NOT TO BE USED FOR OTHER PURPOSES AND ARE TO BE RETURNED UPON REQUEST OF THE FORWARDING CONTRACTOR.

NUMBER OF SECTION OR DETAIL
DRAWING ON WHICH SECTION OR DETAIL IS SHOWN
SECTION AND DETAIL KEY

THIS DOCUMENT CONTROLLED BY
CHANGE CONTROL SYSTEM 3
ENGINEERING PROCEDURE SNS-ENG-G001

REV	CHANGE TYPE	CHANGE CONTROL SYSTEM	CHANGE REQUEST NUMBER	DESCRIPTION	DSN	CHK	DEPT	DATE	PE	DATE	PJ	DATE	REQ	DATE	UTB	DATE	RPE	RPE NO	DATE	ST	CV	EC	EE	EM	IE	M	PD	SE	AR
0				CERTIFIED FOR CONSTRUCTION 10/26/01	LJF	JVH			PD	11/15/01	RAD	11/16/01				11/12/01	JVH	107492	10/26/01										

REVISION OR ISSUE PURPOSE — REVISION APPROVALS — SQUAD CHECK

RPE: JERRY WAYNE HARRIS, REGISTERED ENGINEER, INDUSTRIAL ENGINEERING, STATE OF TENNESSEE

DSN		10/24/01
DRW		10/24/01
CHK		11/14/01
DEPT		
PE		11/15/01
PJ		11/12/01
REQ		
REV. 0	DATE 10/24/01	UTB 11/12/01

DRAWING APPROVALS

108030700-J8E-8700-A272

Knight/Jacobs
Knight/Jacobs Joint Venture
701 Scarboro Road, MS 8253
Oak Ridge, TN 37830
865-241-9433
Fax865-241-3400

MERRICK Engineers & Architects

UT-BATTELLE
Oak Ridge National Laboratory, managed by UT-Battelle, LLC, for the U.S. Dept. of Energy under contract DE-AC05-00OR22725

PROJECT NAME:
SPALLATION NEUTRON SOURCE
TARGET BUILDING
INPUT ENCLOSURE PANEL No.1 & No.2
LAYOUT / WIRING DIAGRAM / SCHEMATIC

1	4B	49	50	PLANT	BLDG	FL	SH.	OF	TYPE	CLASS
3	J	X	X	8	8700		1	1	G	U
51		52		53	WBS					REV
NC		NA		IN	1.8.3.7		J1.30.30			0

J1.30.30