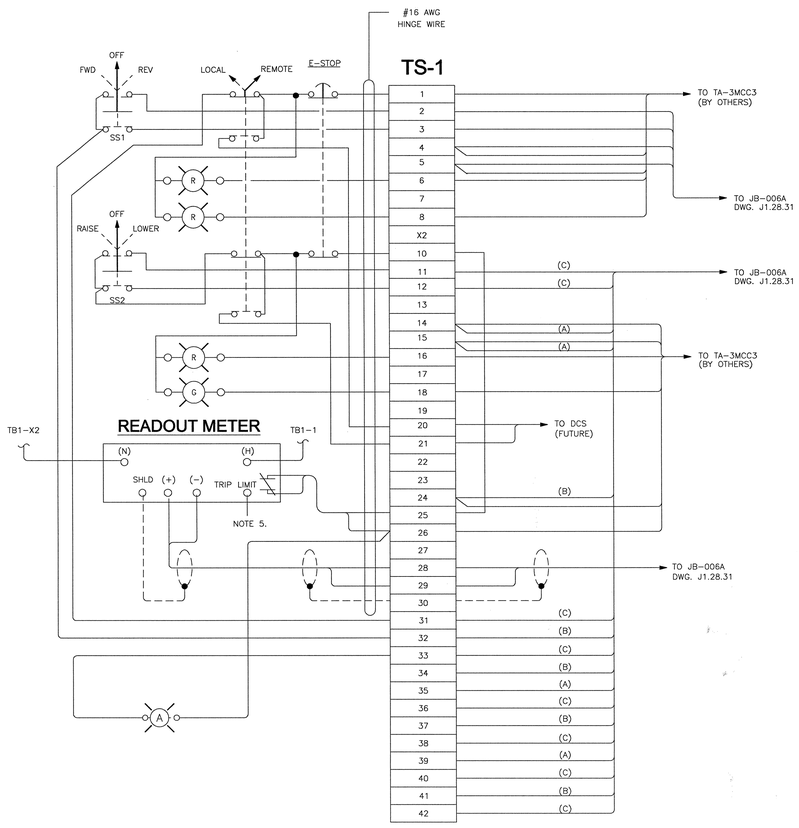


CASK CART FORWARD/REVERSE &

RAISE/LOWER CONTROL PANEL

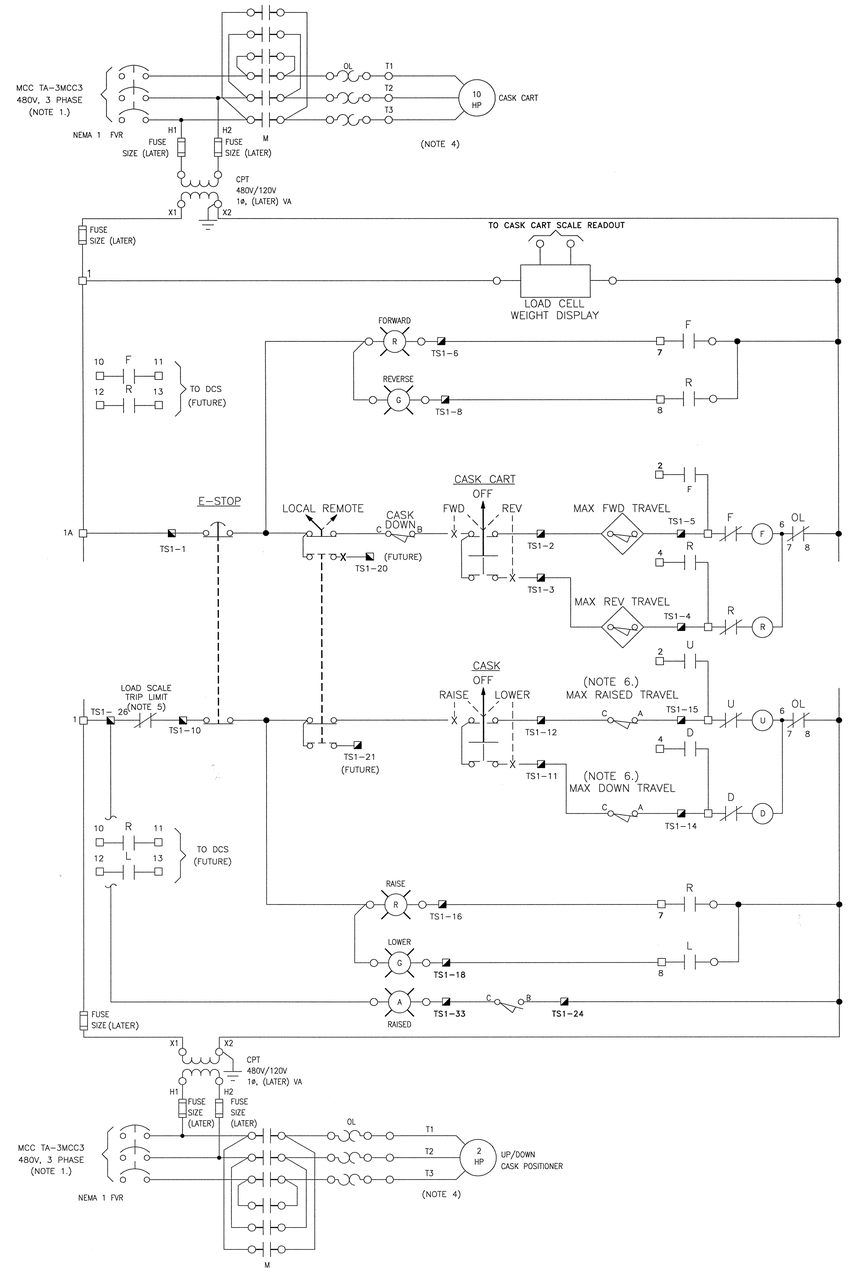


SCHEMATIC DIAGRAM

CASK CART FORWARD/REVERSE

& RAISE/LOWER CONTROL PANEL

## NOTES:

1. CONTROL CENTER STARTERS BY KNIGHT.
2. RE-TERMINATE AS REQUIRED FOR 4-20 mA SERIES CIRCUIT TO FUTURE DCS.
3. ALL MATERIALS AND WORKMANSHIP SHALL CONFORM TO CSI SECTION 16000 AND ALL SUB-SECTIONS.
4. POWER CIRCUIT BY KNIGHT TO JB-005A DWG. J1-28.31.
5. LOAD SCALE DISPLAY RELAY OPTIONAL CONTACTS OPEN AT 15% ABOVE 100,000 LBS. TO TRIP MOTOR IN CASE FOR SCREW JACK MALFUNCTION OR MISSALIGNMENT OF CASK.
6. TRAVEL SWITCHES ARE DPDT, SEE SCHEMATIC REPRESENTATION. (4), DPDT SWITCHES ARE AVAILABLE.

LEGEND

□ 8 — TA-3MCC3 TERMINAL

◪ TS1-* — CASK CART CONTROL PANEL TERMINAL
* - TERMINAL NUMBER

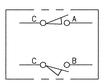

TYPICAL JACK POSITION
LIMIT SWITCHES

NO REPRESENTATION OR WARRANTY, EXPRESSED OR IMPLIED, IS MADE AS TO THE ACCURACY, COMPLETENESS OR USEFULNESS OF THE INFORMATION OR STATEMENTS CONTAINED IN THESE DRAWINGS, OR THAT THE USE OR DISCLOSURE OF ANY INFORMATION, APPARATUS, METHOD, OR PROCESS DISCLOSED IN THESE DRAWINGS MAY NOT INFRINGE PRIVATE RIGHTS OF OTHERS. NO LIABILITY IS ASSUMED WITH RESPECT TO THE USE OF, OR FOR DAMAGES RESULTING FROM THE USE OF ANY INFORMATION, APPARATUS, METHOD, OR PROCESS DISCLOSED IN THESE DRAWINGS. DRAWINGS MADE AVAILABLE FOR INFORMATION TO BIDDER ARE NOT TO BE USED FOR OTHER PURPOSES AND ARE TO BE RETURNED UPON REQUEST OF THE FORWARDING CONTRACTOR.

NUMBER OF SECTION OR DETAIL
DRAWING ON WHICH SECTION OR DETAIL IS SHOWN
SECTION AND DETAIL KEY

THIS DOCUMENT CONTROLLED BY
CHANGE CONTROL SYSTEM 3
ENGINEERING PROCEDURE SNS-ENG-G001

| REV | CHANGE TYPE | CHANGE CONTROL SYSTEM | CHANGE REQUEST NUMBER | DESCRIPTION | DSN | CHK | DEPT | DATE | PE | DATE | PJ | DATE | REQ | DATE | UTB | DATE | RPE | RPE NO | DATE | ST | CV | EC | EE | EM | IE | M | PD | SE | AR |
|---|---|---|---|---|---|---|---|---|---|---|---|---|---|---|---|---|---|---|---|---|---|---|---|---|---|---|---|---|---|
| 0 | | | | CERTIFIED FOR CONSTRUCTION 10/26/01 | LJF | JWH | | | | 11/13/01 | RAP | 11/16/01 | | | | 11/12/01 | JWH | 107492 | 10/26/01 | | | | | | | | | | |

REVISION OR ISSUE PURPOSE — REVISION APPROVALS — SQUAD CHECK

RPE — JERRY WAYNE HARRIS — REGISTERED ENGINEER — STATE OF TENNESSEE

| | | |
|---|---|---|
| DSN | | 10/23/01 |
| DRW | | 10/26/01 |
| CHKR | | 10/26/01 |
| DEPT | | |
| PE | | 11/13/01 |
| PIE | | |
| PJ | | 11/16/01 |
| REQ | | |
| UTB | | 11/12/01 |

REV. 0 DATE 10/26/01 — DRAWING APPROVALS

108030700-J8E-8700-A121

Knight Jacobs
Knight/Jacobs Joint Venture
701 Scarboro Road, MS 8253
Oak Ridge, TN 37830
865-241-9433
fax 865-241-3400
MERRICK Engineers & Architects

UT-BATTELLE
Oak Ridge National Laboratory, managed by UT-Battelle, LLC, for the U.S. Dept. of Energy under contract DE-AC05-00OR22725

PROJECT NAME:
SPALLATION NEUTRON SOURCE

TARGET BUILDING
CASK CART CONTROL PANEL
WIRING DIAGRAM & SCHEMATIC

| 1 | 48 | 49 | 50 | PLANT | BLDG | FL | SH. | OF | TYPE | CLASS |
|---|---|---|---|---|---|---|---|---|---|---|
| 3 | J | X | X | 8 | 8700 | | 1 | 1 | G | U |

| 51 | 52 | 53 | WBS | | REV |
|---|---|---|---|---|---|
| NC | NA | IN | 1.8.3.7 | J1.28.35 | 0 |

J1.28.35