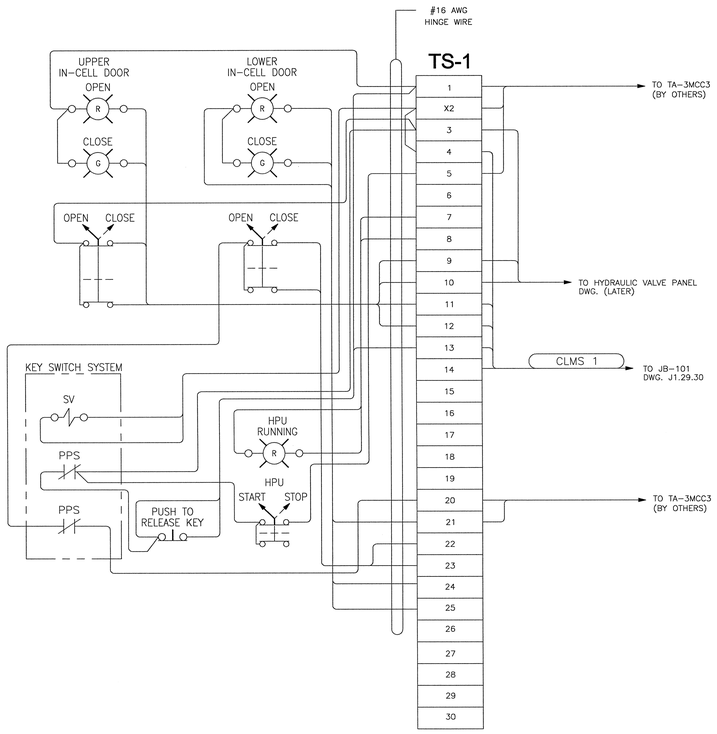

IN-CELL SHIELD DOOR
CONTROL PANEL

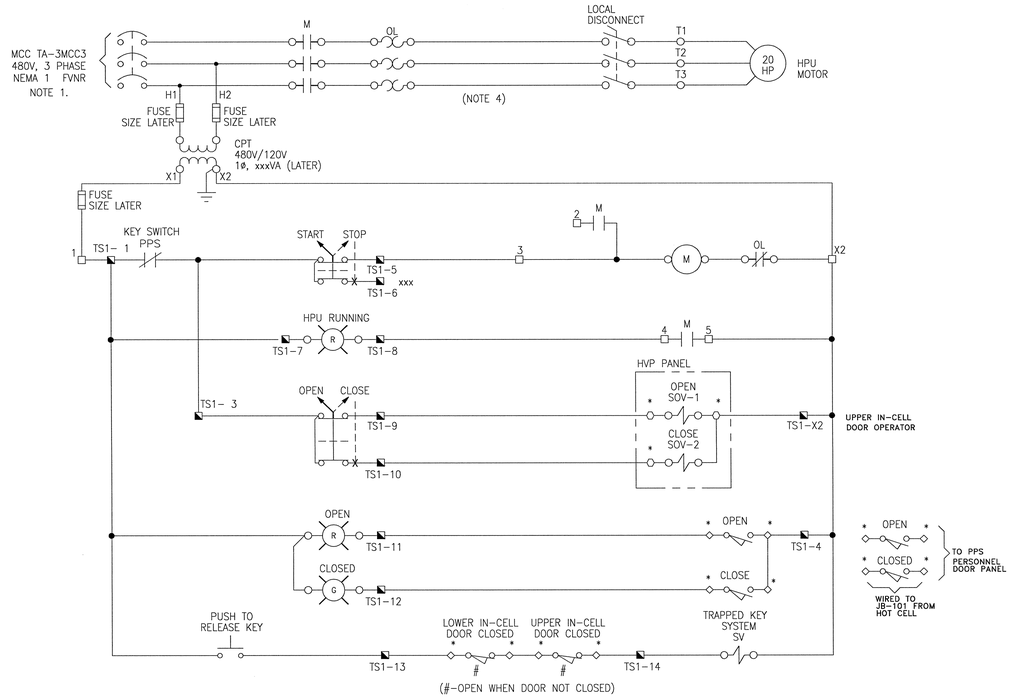

SCHEMATIC DIAGRAM
HPU &
IN-CELL UPPER SHIELDED DOOR

NOTES:

1. MOTOR CONTROL CENTER STARTERS BY KNIGHT.
2. RE-TERMINATE AS REQUIRED FOR 4-20 mA SERIES CIRCUIT TO FUTURE DCS.
3. ALL MATERIALS AND WORKMANSHIP SHALL CONFORM TO CSI SECTION 16000 AND ALL SUB-SECTIONS.
4. POWER CIRCUIT BY KNIGHT.
5. LOAD SCALE DISPLAY RELAY OPTIONAL CONTACTS OPEN AT 15% ABOVE 100,000 LBS. TO TRIP MOTOR IN CASE FOR SCREW JACK MALFUNCTION OR MISSALIGNMENT OF CASK.

LEGEND

- 8 □ TA-3MCC3 TERMINAL
- TS1-* ◪ IN-CELL DOOR CONTROL PANEL TERMINAL
  * – TERMINAL NUMBER
- * ◇ JB-007
  * – TERMINAL NUMBER
- * ○ HPU PANEL TERMINAL
  * – TERMINAL NUMBER

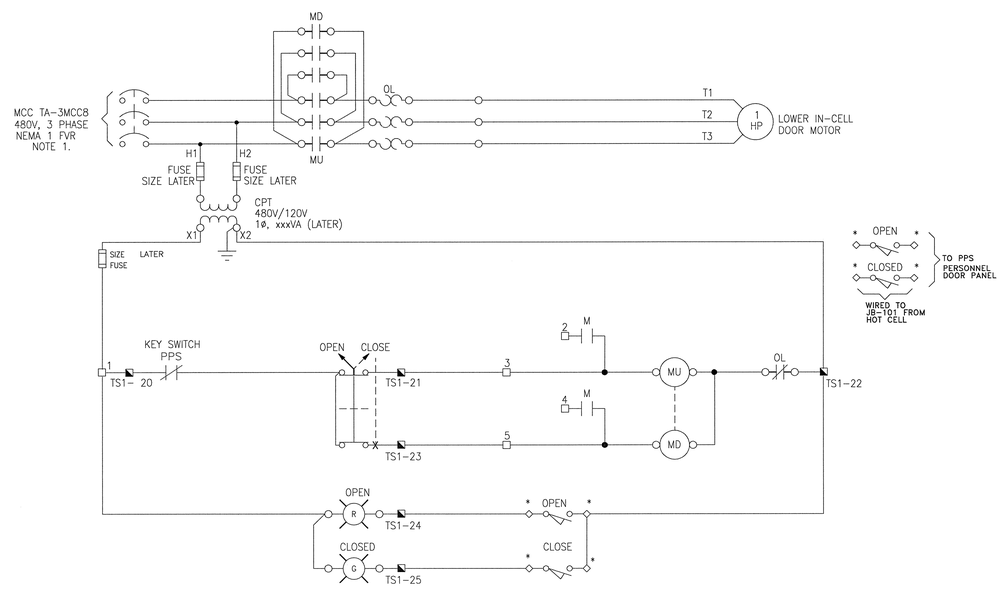

SCHEMATIC DIAGRAM
LOWER
IN-CELL SHIELDED DOOR

J1.28.32

108030700-J8E-8700-A118

Knight/Jacobs Joint Venture
701 Scarboro Road, MS 8253
Oak Ridge, TN 37830
865-241-9433
fax 865-241-3400

MERRICK Engineers & Architects

UT-BATTELLE — Oak Ridge National Laboratory, managed by UT-Battelle, LLC, for the U.S. Dept. of Energy under contract DE-AC05-00OR22725

PROJECT NAME:
SPALLATION NEUTRON SOURCE
TARGET BUILDING
IN-CELL SHIELDED DOOR CONTROL PANEL
WIRING DIAGRAM & SCHEMATIC

REV	CHANGE TYPE	CHANGE CONTROL SYSTEM	CHANGE REQUEST NUMBER	DESCRIPTION	DSN	CHK	DEPT	DATE	PE	DATE	PJ	DATE	REQ	DATE	UTB	DATE	RPE	RPE NO	DATE	ST	CV	EC	EE	EM	IE	M	PD	SE	AR
0				CERTIFIED FOR CONSTRUCTION 10/26/01	LJF	JWH			PJD	11/12/01	RAD	11/14/01			CHK	11/14/01	JWH	107492	11/13/01										

REVISION OR ISSUE PURPOSE — REVISION APPROVALS — SQUAD CHECK

RPE		
DSGN		11/13/01
DRW		11/13/01
CHKR		11/13/01
BEET		
BEPT		
PE		11/14/01
PJ		11/14/01
REQ		
UTBER		11/14/01

REV. DATE — DRAWING APPROVALS

1	48	49	50	PLANT	BLDG	FL	SH.	OF	TYPE	CLASS
3	J	X	X	8	8700		1	1	G	U
51		52		53	WBS					REV
NC		NA		IN	1.8.3.7		J1.28.32			0

NO REPRESENTATION OR WARRANTY, EXPRESSED OR IMPLIED, IS MADE AS TO THE ACCURACY, COMPLETENESS OR USEFULNESS OF THE INFORMATION OR STATEMENTS CONTAINED IN THESE DRAWINGS, OR THAT THE USE OR DISCLOSURE OF ANY INFORMATION, APPARATUS, METHOD, OR PROCESS DISCLOSED IN THESE DRAWINGS MAY NOT INFRINGE PRIVATE RIGHTS OF OTHERS. NO LIABILITY IS ASSUMED WITH RESPECT TO THE USE OF, OR FOR DAMAGES RESULTING FROM THE USE OF ANY INFORMATION, APPARATUS, METHOD, OR PROCESS DISCLOSED IN THESE DRAWINGS. DRAWINGS MADE AVAILABLE FOR INFORMATION TO BIDDER ARE NOT TO BE USED FOR OTHER PURPOSES AND ARE TO BE RETURNED UPON REQUEST OF THE FORWARDING CONTRACTOR.

NUMBER OF SECTION OR DETAIL — DRAWING ON WHICH SECTION OR DETAIL IS SHOWN
SECTION AND DETAIL KEY

THIS DOCUMENT CONTROLLED BY
CHANGE CONTROL SYSTEM 3
ENGINEERING PROCEDURE SNS-ENG-G001