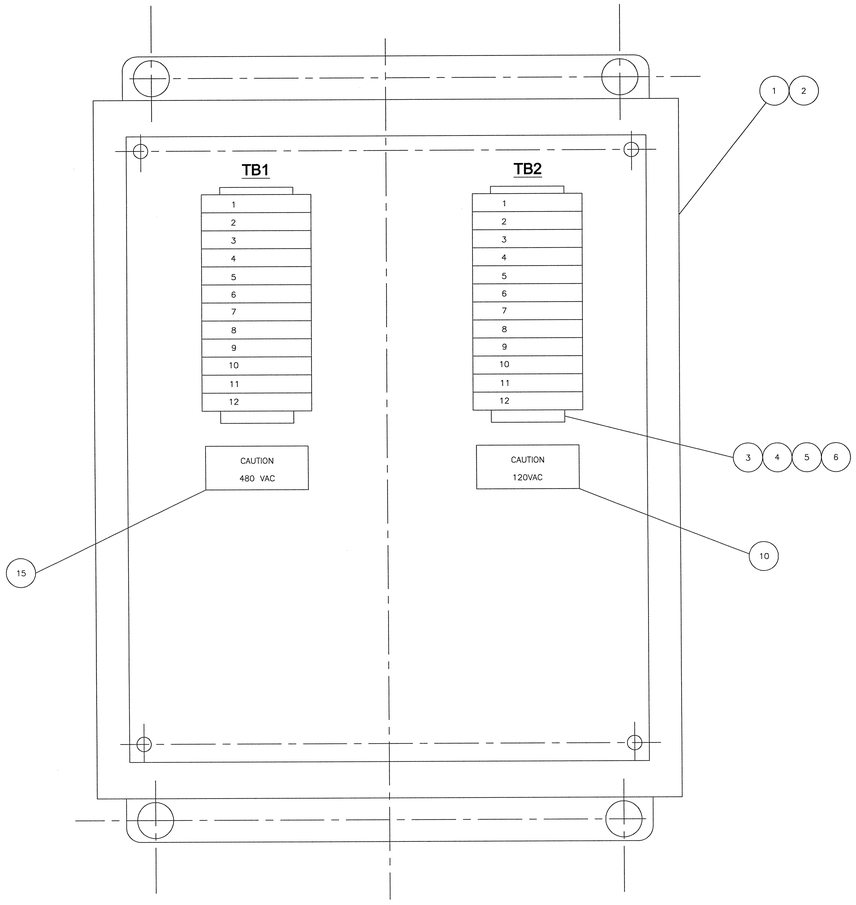

POWER JUNCTION BOX LAYOUT

SCALE: 1 / 1

(COVER REMOVED FOR CLARITY)

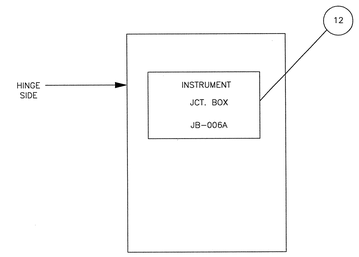

NAMEPLATE & ORIENTATION

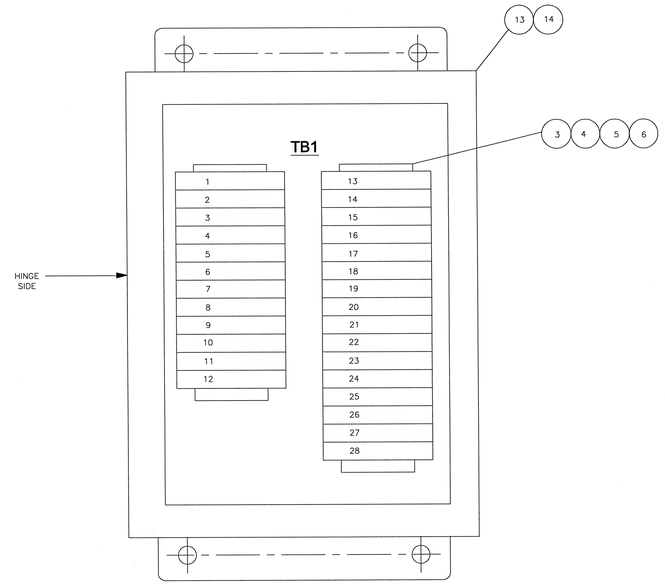

INSTRUMENT TERMINAL BOX LAYOUT

SCALE: NONE

(COVER REMOVED FOR CLARITY)

BILL OF MATERIALS

	ITEM	QTY	DESCRIPTION	MANUFACTURER	PART No.
	1	1	JUNCTION BOX 12"x10"x6"	HOFFMAN	A-12106CHNFSS
	2	1	REAR PANEL 10.75"x8.88"	HOFFMAN	A12P10SS
	3	1	MOUNTING RAIL	ALLEN-BRADLEY	199-DR1
	4	52	TERMINAL	ALLEN-BRADLEY	1492-W10
	5	8	END ANCHOR	ALLEN-BRADLEY	1492-EA35
	6	4	END BARRIER	ALLEN-BRADLEY	1492-EB10
	7	.	NOT USED	.	.
	8	.	NOT USED	.	.
	9	.	NOT USED	.	.
SEE NOTE 1.	10	1	NAMEPLATE PLASTIC	PANEL VENDOR	N/A
SEE NOTE 2.	11	1	NAMEPLATE PLASTIC	PANEL VENDOR	N/A
SEE NOTE 2.	12	1	NAMEPLATE PLASTIC	PANEL VENDOR	N/A
	13	1	JUNCTION BOX 8"x6"x4"	HOFFMAN	A-8064CHNFSS
	14	1	REAR PANEL 6.75"x4.88"	HOFFMAN	A-8P6SS
SEE NOTE 2.	15	1	NAMEPLATE PLASTIC	PANEL VENDOR	N/A
	16	–	NOT USED		
	17	–	NOT USED		
	18	–	SUPER FLEXIBLE 3/C #16 SHLD.	OLFLEX-FD89	891603C4
	19	–	SUPER FLEXIBLE 4/C #12	OLFLEX-FD89	891204C4

NOTES:

1. NAMEPLATE MATERIAL PLASTIC LAMACOID, .062 THK., RED W/WHITE CORE USE .250" HIGH CHARACTERS.
2. NAMEPLATE MATERIAL PLASTIC LAMACOID, .062 THK., BLACK W/WHITE CORE USE .250" HIGH CHARACTERS.
3. SEE MERRICK DRAWING J7.81.45 FOR MOUNTING LOCATION.
4. WIRING SHOW OUT OF THIS INTERMEDIATE J-BOX TO BE ROUTED TO JUNCTION BOX "JB-005" AND INSTRUMENT JUNCTION BOX "JB-006". VIA CABLE TRACK.
5. ALL MATERIALS AND WORKMANSHIP SHALL CONFORM TO CSI SECTION 16000 AND ALL SUB-SECTIONS.
6. TERMINAL BLOCKS SHALL BE COVERED WITH A CLEAR PLEXIGLASS SHIELD TO PREVENT ACCIDENTIAL CONTACT BY PERSONNEL.

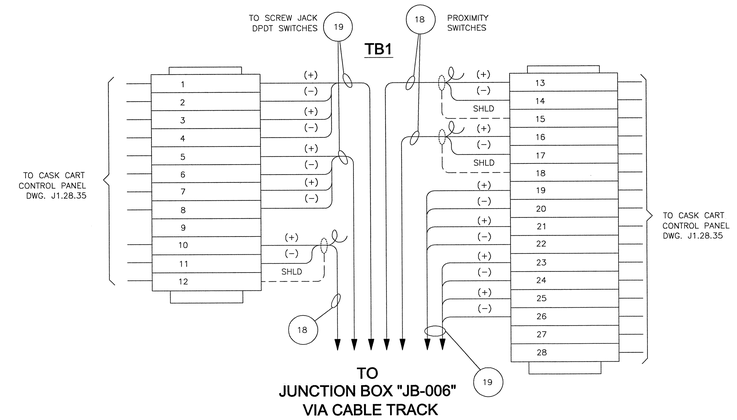

INSTRUMENT TERMINAL BOX WIRING

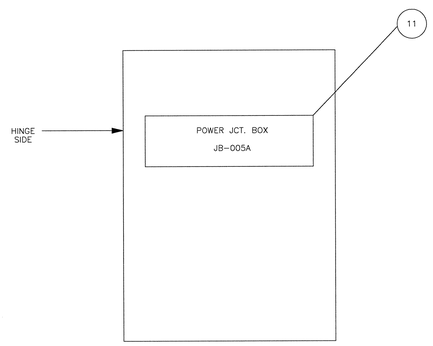

NAMEPLATE & ORIENTATION

SCALE: NONE

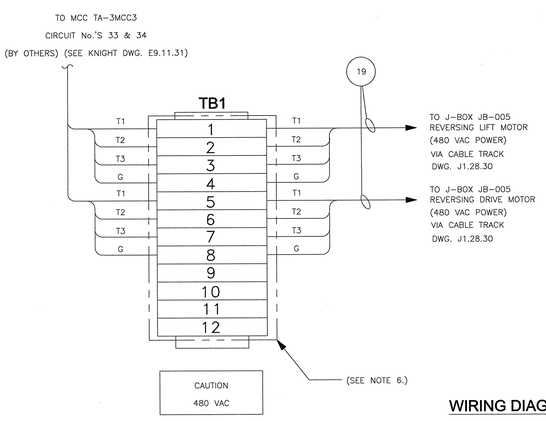

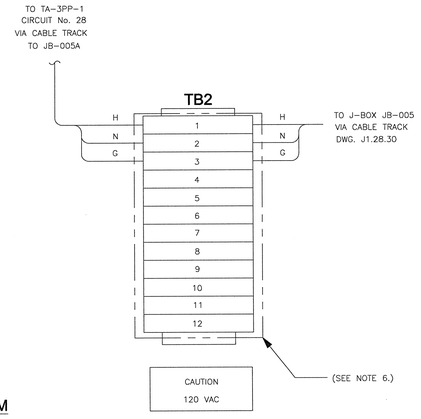

WIRING DIAGRAM

CASK CART, RECEPTACLE AND POWER FOR MOTORS

NO REPRESENTATION OR WARRANTY, EXPRESSED OR IMPLIED, IS MADE AS TO THE ACCURACY, COMPLETENESS OR USEFULNESS OF THE INFORMATION OR STATEMENTS CONTAINED IN THESE DRAWINGS, OR THAT THE USE OR DISCLOSURE OF ANY INFORMATION, APPARATUS, METHOD, OR PROCESS DISCLOSED IN THESE DRAWINGS MAY NOT INFRINGE PRIVATE RIGHTS OF OTHERS. NO LIABILITY IS ASSUMED WITH RESPECT TO THE USE OF, OR FOR DAMAGES RESULTING FROM THE USE OF ANY INFORMATION, APPARATUS, METHOD, OR PROCESS DISCLOSED IN THESE DRAWINGS. DRAWINGS MADE AVAILABLE FOR INFORMATION TO BIDDER ARE NOT TO BE USED FOR OTHER PURPOSES AND ARE TO BE RETURNED UPON REQUEST OF THE FORWARDING CONTRACTOR.

NUMBER OF SECTION OR DETAIL — DRAWING ON WHICH SECTION OR DETAIL IS SHOWN

SECTION AND DETAIL KEY

THIS DOCUMENT CONTROLLED BY

CHANGE CONTROL SYSTEM 3

ENGINEERING PROCEDURES NS-ENG-G001

REV	CHANGE TYPE	CHANGE CONTROL SYSTEM	CHANGE REQUEST NUMBER	DESCRIPTION	DSN	CHK	DEPT	DATE	PE	DATE	PJ	DATE	REQ	DATE	UTB	DATE	RPE	RPE NO	DATE	ST	CV	EC	EE	EM	IE	M	PD	SE	AR
0				CERTIFIED FOR CONSTRUCTION 10/26/01	LJF	JWH			PD	11/8/01	RAD	11/12/01			JWH	11/12/01	JWH	107492	10/26/01										

REVISION OR ISSUE PURPOSE — REVISION APPROVALS — SQUAD CHECK

RPE — JERRY WAYNE HARRIS, REGISTERED ENGINEER, AGRICULTURE, NO. 18154, STATE OF TENNESSEE

DSN		10/25/01
DRW		10/25/01
CHK		10/25/01
DEPT		
PE		11/13/01
PJ		11/12/01
REQ		
UTB		11/12/01

REV. 0 DATE 10/25/01 — DRAWING APPROVALS

108030700-J8E-8700-A117

Knight/Jacobs Joint Venture
701 Scarboro Road, MS 8253
Oak Ridge, TN 37830
865-241-9433
fax 865-241-3400

MERRICK Engineers & Architects

UT-BATTELLE — Oak Ridge National Laboratory, managed by UT-Battelle, LLC, for the U.S. Dept. of Energy under contract DE-AC05-00OR22725

PROJECT NAME:

SPALLATION NEUTRON SOURCE

TARGET BUILDING
CASK CART ASSY. INTERMEDIATE J-BOX DETAILS
JB-005A POWER & JB-006A INSTRUMENT

1	48	49	50	PLANT	BLDG	FL	SH.	OF	TYPE	CLASS
3	J	X	X	8	8700		1	1	G	U

51	52	53	
NC	NA	IN	WBS 1.8.3.7

J1.28.31 — REV 0

J1.28.31