NEXT ASS'Y:

FINAL ASS'Y:

PARTS LIST

PART NO.	DRAWING NO.	DESCRIPTION	QTY
1	J3.55.30	TRITIUM REMOVAL GLOVEBOX ASSEMBLY	1
2		CHROMALOX CONTACTOR PANEL P/N 4468-30300XX WITH 1604-11330 CONTROLLER	1
3		HOFFMAN JUNCTION BOX, 12" X 10" X 6"	2
4		LC3 LEVEL CONTROLLER, LIQUID NITROGEN, TERAGON, LC, LSHL-8003	1
5		NITROGEN LEVEL ALARM, TERAGON, (LSLL-8004 & LSHH-8009)	2
6		RECEPTACLE, DUPLEX, 3/4" CONDUIT, DIE CAST ALUM. CONDULET P/N FS1-SA	1
7		RECEPTACLE, FOURPLEX, 3/4" CONDUIT, DIE CAST ALUM. CONDULET P/N FS12	1
9		CONDUIT BODY, TYPE LB, 3/4, W/ COVER AND GASKET, GALVINIZED COMPRESSION TYPE	4
10		CONDUIT BODY, TYPE LL, 3/4, W/ COVER AND GASKET, GALVINIZED COMPRESSION TYPE	3
11		CONDUIT BODY, TYPE LR, 3/4, W/ COVER AND GASKET, GALVINIZED COMPRESSION TYPE	4
12		CONDUIT, 3/4", EMT	AR
13		CONDUIT, 1/2" SEALTITE	1
14		NAMEPLATE, JB-001	1
15		NAMEPLATE, JB-001A	1

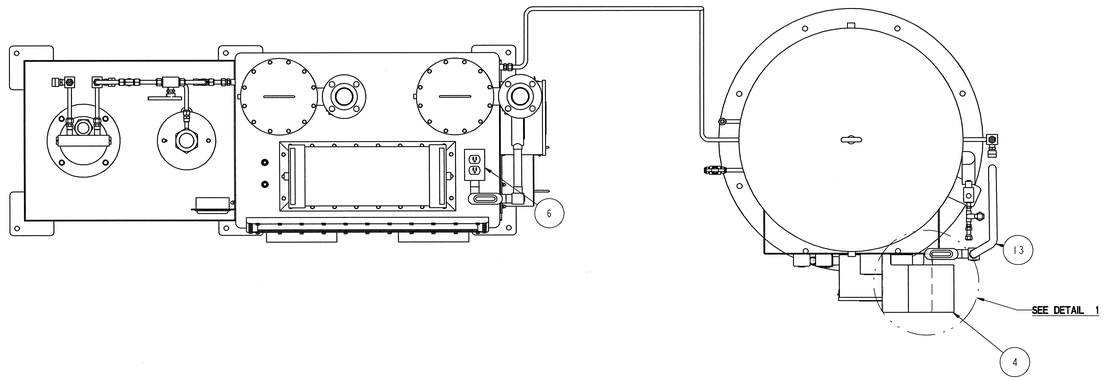

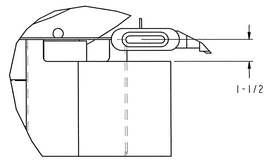

DETAIL 1
SCALE 1/4

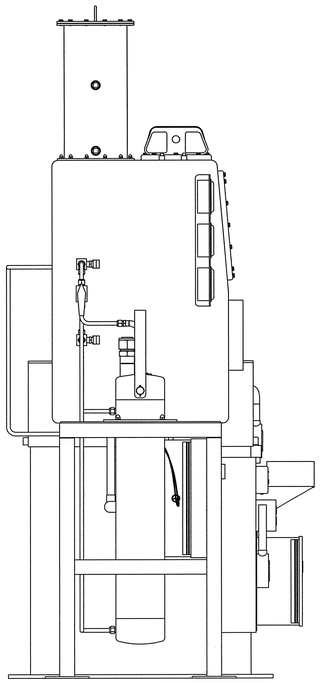

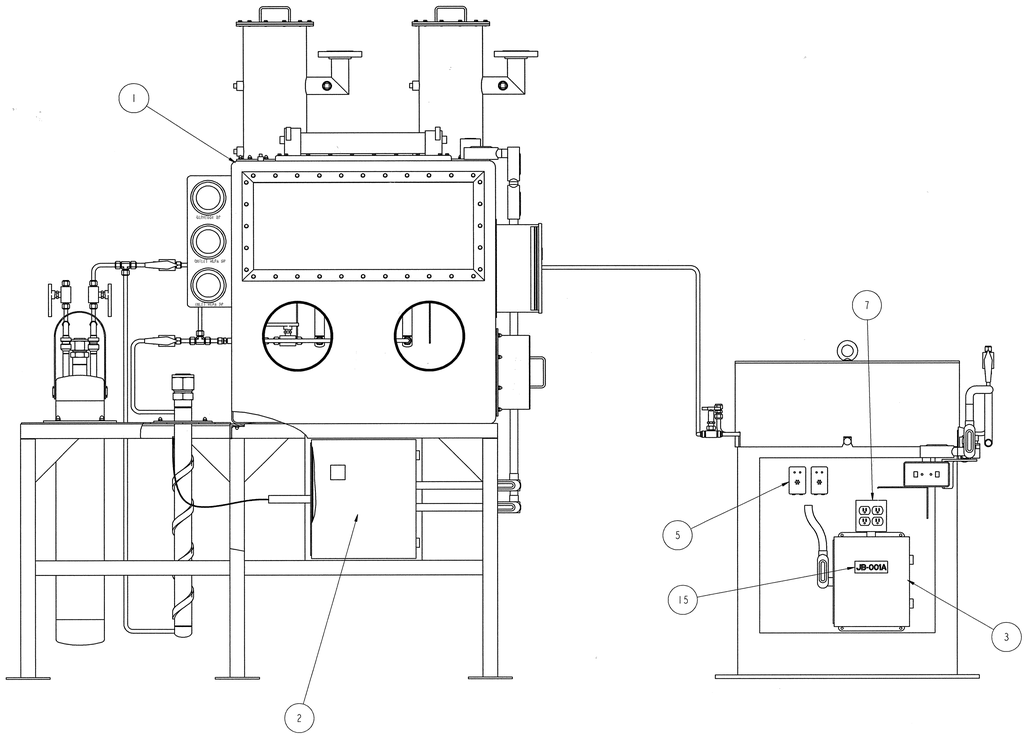

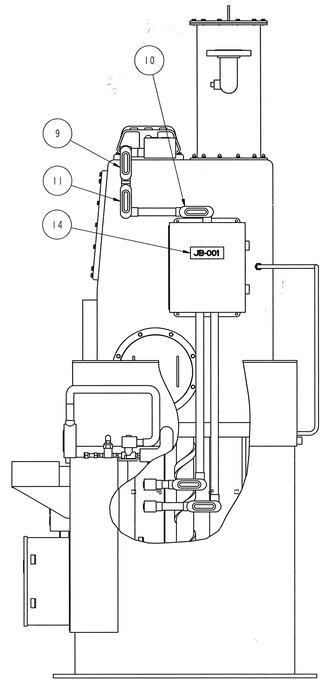

SCALE: 1/8

108030700-J8E-8700-A115

Knight/Jacobs Joint Venture
701 Scarboro Road, MS 6253
Oak Ridge, TN 37830
865-241-9433
fax 865-241-3400

MERRICK Engineers & Architects

UT-BATTELLE — Oak Ridge National Laboratory, managed by UT-Battelle, LLC, for the U.S. Dept. of Energy under contract DE-AC05-00OR22725

PROJECT NAME:
SPALLATION NEUTRON SOURCE

TARGET BUILDING TRITIUM REMOVAL GLOVEBOX ELECTRICAL ASSEMBLY

1	48	49	50	PLANT	BLDG	FL	SH.	OF	TYPE	CLASS
3	J	X	X	8	8700		1	1	G	U

51	52	53	WBS	REV
NC	NA	IN	1.8.3.7	J1.27.31	0

J1-27-31

ELECT only

RPE

JERRY WAYNE HARRIS — REGISTERED PROFESSIONAL ENGINEER — STATE OF TENNESSEE

REV. 0 DATE 10/26/01

DSN		10/23/01
DRW		11/2/01
CHK		10/26/01
DEPT		
PE		11/5/01
PJ	RG Dean	11/16/01
REQ		
UTB		11/12/01

DRAWING APPROVALS

REV	FORMAT CHANGE	CHANGE CONTROL SYSTEM	CHANGE NUMBER	DESCRIPTION	DSN	CHK	DEPT	DATE	PE	DATE	PJ	DATE	REQ	DATE	UTB	DATE	RPE	RPE NO	DATE	ST	CV	EC	EE	EM	IE	M	PD	SE	AR
0				CERTIFIED FOR CONSTRUCTION - 10/26/01	LJF	JWH			RJD	11/15/01	RDP	11/16/01	-			11/12/01	JWH	107492	10/26/01										

REVISION OR ISSUE PURPOSE — REVISION APPROVALS — SQUAD CHECK

NO REPRESENTATION OR WARRANTY, EXPRESSED OR IMPLIED, IS MADE AS TO THE ACCURACY, COMPLETENESS OR USEFULNESS OF THE INFORMATION OR STATEMENTS CONTAINED IN THESE DRAWINGS, OR THAT THE USE OR DISCLOSURE OF ANY INFORMATION, APPARATUS, METHOD OR PROCESS DISCLOSED IN THESE DRAWINGS MAY NOT INFRINGE PRIVATE RIGHTS OF OTHERS. NO LIABILITY IS ASSUMED WITH RESPECT TO THE USE OF, OR FOR DAMAGES RESULTING FROM THE USE OF, ANY INFORMATION, APPARATUS, METHOD OR PROCESS DISCLOSED IN THESE DRAWINGS. DRAWINGS MADE AVAILABLE FOR INFORMATION TO BIDDER ARE NOT TO BE USED FOR OTHER PURPOSES, AND ARE TO BE RETURNED UPON REQUEST OF THE FORWARDING CONTRACTOR.

P THIS DRAWING PRODUCED ON PRO-ENGINEER

THIS DOCUMENT CONTROLLED BY CHANGE CONTROL SYSTEM 3
ENGINEERING PROCEDURE SNS-ENG-G001