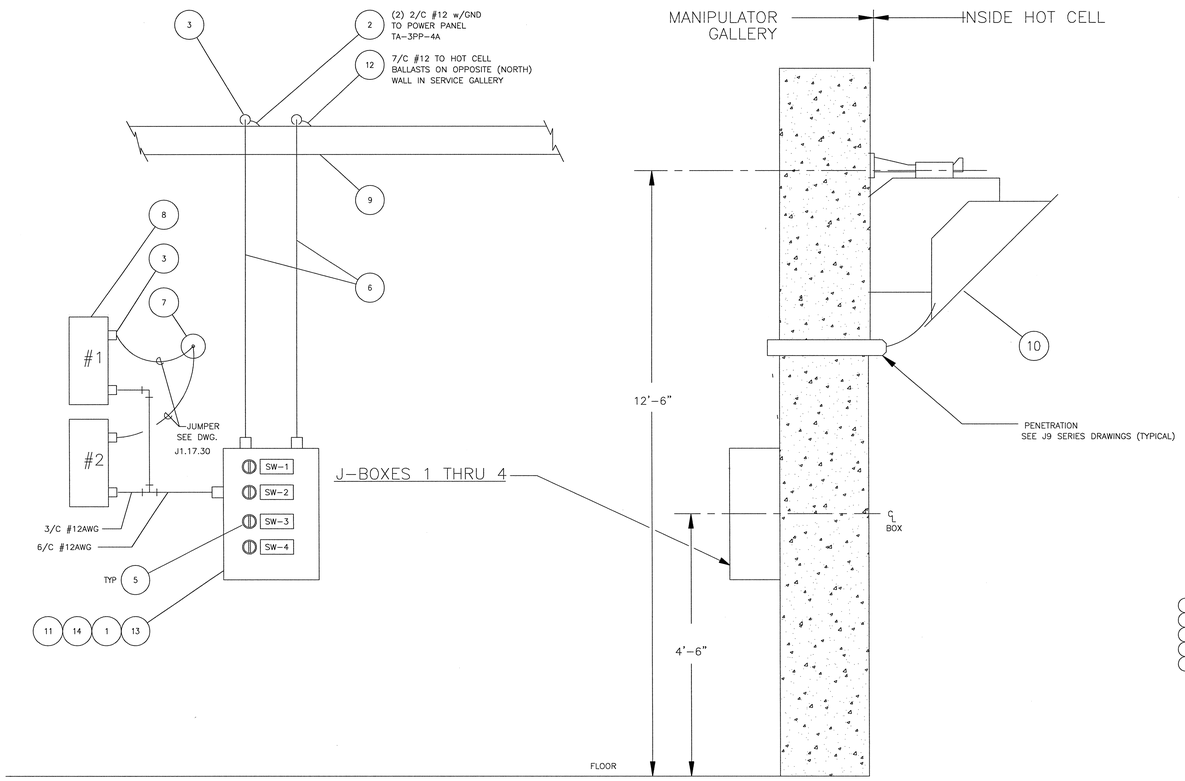

DETAIL "A"

SCALE: NONE

TYPICAL SOUTH WALL INSTALLATION

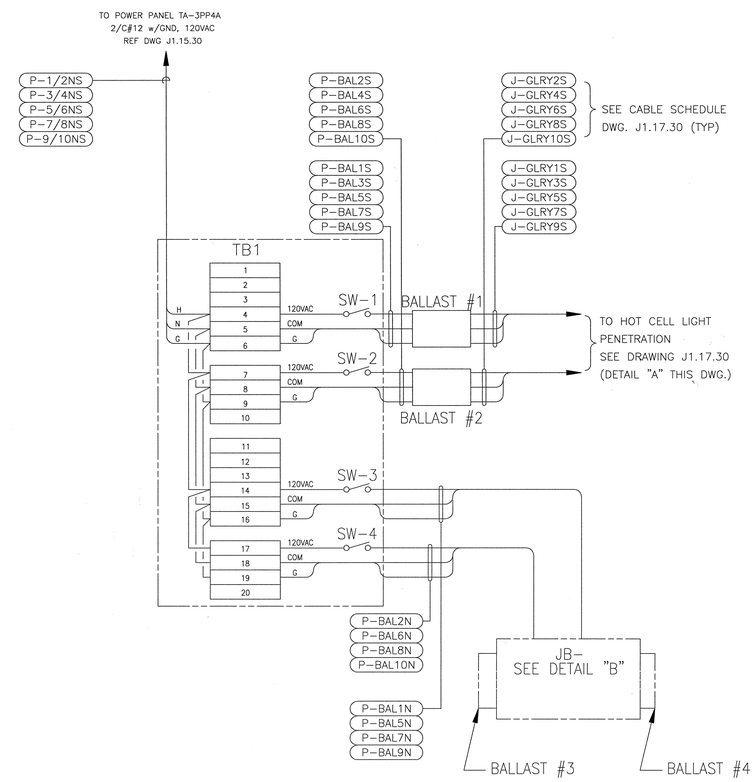

JUNCTION BOX JB1 THRU JB4 WIRING DIAGRAM

SCALE: NONE

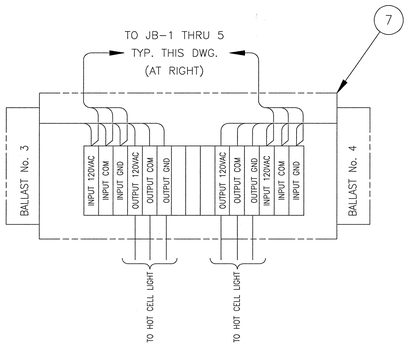

DETAIL "B"

SCALE: NONE

JB-N-116-P-1 (BALLAST 9N, 10N)
JB-N-86-P-1 (BALLAST 7N, 8N)
JB-N-32-P-1 (BALLAST 1N,2N)
JB-N-74-P-1 (BALLAST 5N, 6N)
JB-N-64-P (BALLAST 3N)

BILL OF MATERIALS

ITEM	QTY	DESCRIPTION	MANUFACTURER	PART No.
1	5	JUNCTION BOX, 12"x12"x6", TYPE 1	HOFFMAN	SEE DWG J1.17.33
2	AR	CABLE, 2/C #12 w/GND	N/A	N/A
3	3	CABLE BUSHING, 3/4"	CROUSE-HINDS	CGB2018
4	5	PENETRATION		
5	4	SELECTOR SWITCH 2 POSITION	ALLEN-BRADLEY	800T-H2D1
6	AR	CONDUIT, RGS, 3/4"	N/A	N/A
7			.	.
8	4	H.I.D. BALLAST 120VAC INPUT	ADVANCE	78E6097-001
9	AR	CABLE TRAY 18" WIDE x 7 1/4" DP	N/A	N/A
10	4	LIGHT FIXTURE 120VAC H.I.D.	NSA	RL2
11	20	TERMINALS	ALLEN-BRADLEY	1492-H1
12	AR	CABLE, 7/C, #12 TRAY RATED	N/A	N/A
13	5	JUNCTION BOX, SUB-PANEL	HOFFMAN	A-12N12P
14	1	MOUNTING RAIL	ALLEN-BRADLEY	1492-N1

NO REPRESENTATION OR WARRANTY, EXPRESSED OR IMPLIED, IS MADE AS TO THE ACCURACY, COMPLETENESS OR USEFULNESS OF THE INFORMATION OR STATEMENTS CONTAINED IN THESE DRAWINGS, OR THAT THE USE OR DISCLOSURE OF ANY INFORMATION, APPARATUS, METHOD, OR PROCESS DISCLOSED IN THESE DRAWINGS MAY NOT INFRINGE PRIVATE RIGHTS OF OTHERS. NO LIABILITY IS ASSUMED WITH RESPECT TO THE USE OF, OR FOR DAMAGES RESULTING FROM THE USE OF ANY INFORMATION, APPARATUS, METHOD, OR PROCESS DISCLOSED IN THESE DRAWINGS. DRAWINGS MADE AVAILABLE FOR INFORMATION TO BIDDER ARE NOT TO BE USED FOR OTHER PURPOSES AND ARE TO BE RETURNED UPON REQUEST OF THE FORWARDING CONTRACTOR.

NUMBER OF SECTION OR DETAIL

DRAWING ON WHICH SECTION OR DETAIL IS SHOWN

SECTION AND DETAIL KEY

THIS DOCUMENT CONTROLLED BY

CHANGE CONTROL SYSTEM 3

ENGINEERING PROCEDURE SNS-ENG-G001

REV	CHANGE TYPE	CHANGE CONTROL SYSTEM	CHANGE REQUEST NUMBER	DESCRIPTION	DSN	CHK	DEPT	DATE	PE	DATE	PJ	DATE	REQ	DATE	UTB	DATE	RPE	RPE NO	DATE	ST	CV	EC	EE	EM	IE	M	PD	SE	AR
0				CERTIFIED FOR CONSTRUCTION 10/26/01	LJF	JWH				11/15/01	RAP	11/16/01				11/12/01	JWH	107492	10/26/01										

REVISION OR ISSUE PURPOSE — REVISION APPROVALS — SQUAD CHECK

RPE — STATE OF TENNESSEE — JERRY WAYNE HARRIS — REGISTERED ENGINEER — AGRICULTURE — NO. 102...

REV. 0 DATE 10/26/01

DRAWING APPROVALS

DSN		10/25/01
DRW		10/25/01
CHK		10/25/01
DEPT		
PE		11/15/01
PJ		11/16/01
REQ		
UTB		11/12/01

108030700-J8E-8700-A010

Knight Jacobs
Knight/Jacobs Joint Venture
701 Scarboro Road, MS 8253
Oak Ridge, TN 37830
865-241-9433
fax 865-241-3400

MERRICK Engineers & Architects

UT-BATTELLE
Oak Ridge National Laboratory, managed by UT-Battelle, LLC, for the U.S. Dept. of Energy under contract DE-AC05-00OR22725

PROJECT NAME:

SPALLATION NEUTRON SOURCE

TARGET BUILDING
LIGHTING AND RECEPTACLE DETAILS
LEVEL L1, SECTOR 45

1	48	49	50	PLANT	BLDG	FL	SH.	OF	TYPE	CLASS
3	J	X	X	8	8700		1	1	G	U

51	52	53		REV
NC	NA	IN	WBS 1.8.3.7	J1.20.30	0

J1.20.30