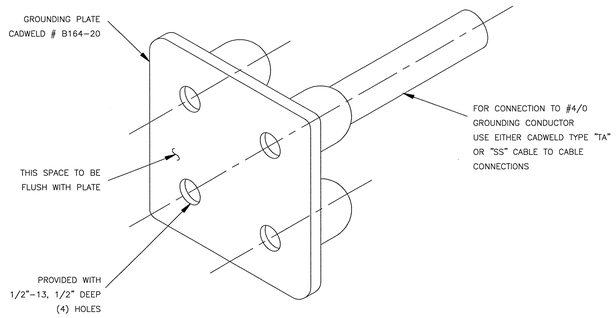

1 **4 HOLE GROUND PLATE DETAIL**
SCALE: NONE

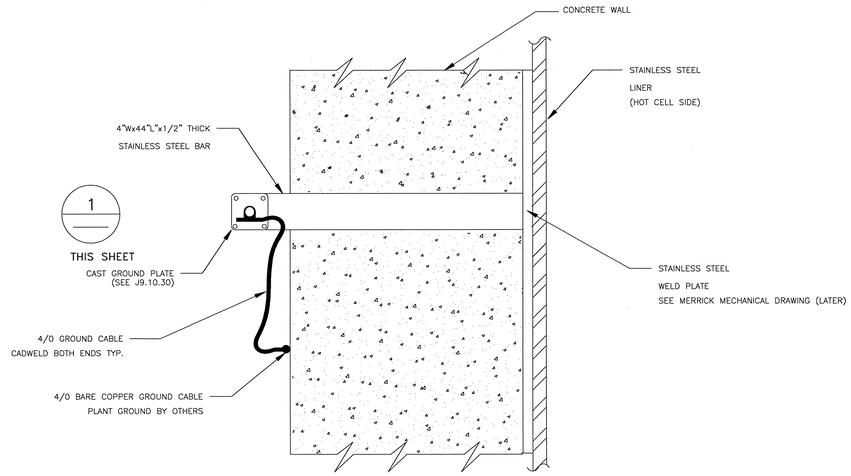

1A **WELD PLATE GROUND DETAIL**
SCALE: NONE

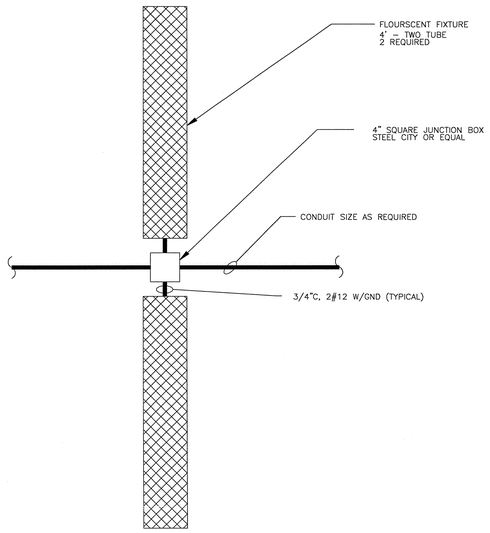

6 **DETAIL**
J6.01.45 | J1.10.30 LIGHT FIXTURE CONDUIT CONNECTIONS

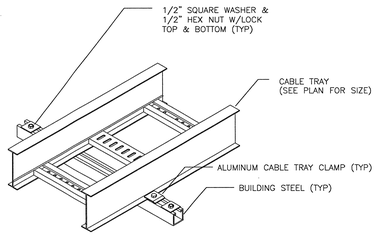

2 **CABLE TRAY SUPPORT**
SCALE: NONE

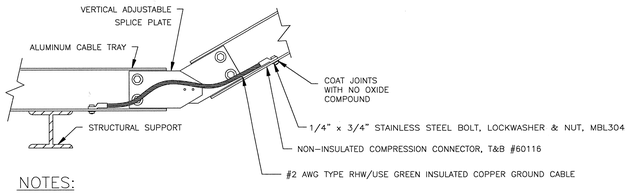

NOTES:
1. PROVIDE SLACK IN ITEM #3 AT TIME OF INSTALLATION TO ALLOW FOR EXPANSION.

3 **CABLE TRAY BONDING**
SCALE: NONE

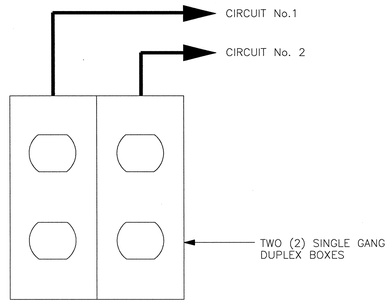

7 **DETAIL**
J6.30.32 | J1.20.32 QUADPLEX RECEPTACLE
SCALE: NONE

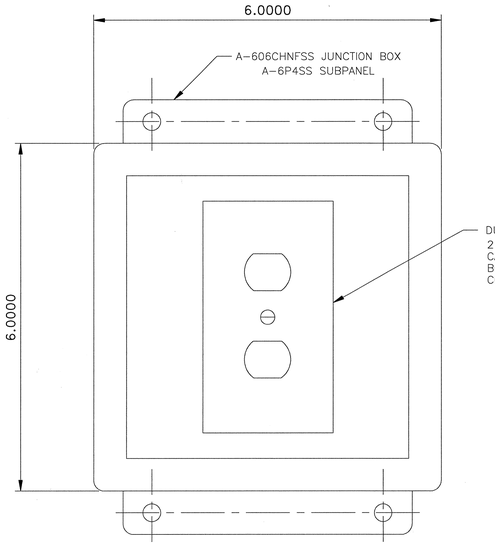

8 **DETAIL**
J6.30.32 | .
HOT CELL RECEPTACLE
TYPICAL FOR 2

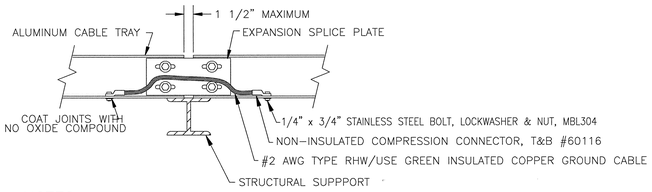

NOTES:
1. PROVIDE SLACK IN ITEM #3 AT TIME OF INSTALLATION TO ALLOW FOR EXPANSION.

4 **CABLE TRAY BONDING**
SCALE: NONE

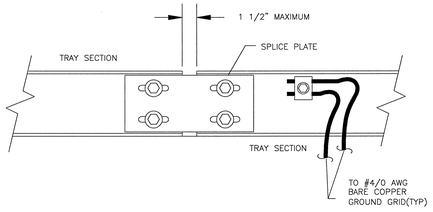

5 **CABLE TRAY GROUNDING**
SCALE: NONE

NO REPRESENTATION OR WARRANTY, EXPRESSED OR IMPLIED, IS MADE AS TO THE ACCURACY, COMPLETENESS OR USEFULNESS OF THE INFORMATION OR STATEMENTS CONTAINED IN THESE DRAWINGS, OR THAT THE USE OR DISCLOSURE OF ANY INFORMATION, APPARATUS, METHOD, OR PROCESS DISCLOSED IN THESE DRAWINGS MAY NOT INFRINGE PRIVATE RIGHTS OF OTHERS. NO LIABILITY IS ASSUMED WITH RESPECT TO THE USE OF, OR FOR DAMAGES RESULTING FROM THE USE OF ANY INFORMATION, APPARATUS, METHOD, OR PROCESS DISCLOSED IN THESE DRAWINGS. DRAWINGS MADE AVAILABLE FOR INFORMATION TO BIDDER ARE NOT TO BE USED FOR OTHER PURPOSES AND ARE TO BE RETURNED UPON REQUEST OF THE FORWARDING CONTRACTOR.

NUMBER OF SECTION OR DETAIL
DRAWING ON WHICH SECTION OR DETAIL IS SHOWN
SECTION AND DETAIL KEY

THIS DOCUMENT CONTROLLED BY
CHANGE CONTROL SYSTEM 3
ENGINEERING PROCEDURE SNS-ENG-G001

REV	CHANGE TYPE	CHANGE CONTROL SYSTEM	CHANGE CONTROL NUMBER	DESCRIPTION	DSN	CHK	DEPT	DATE	PE	DATE	PJ	DATE	REQ	DATE	UTB	DATE	RPE	RPE NO	DATE	ST	CV	EC	EE	EM	IE	M	PD	SE	AR
0				CERTIFIED FOR CONSTRUCTION 10/26/01	LJF	JWH			RD	11/19/01	RBD	11/21/01				11/21/01	JWH	107492	10/26/01										

REVISION OR ISSUE PURPOSE — REVISION APPROVALS — SQUAD CHECK

RPE: TERRY WAYNE HARRIS, REGISTERED ENGINEER, AGRICULTURE, MECHANICAL, ELECTRICAL, 101 STATE OF TENNESSEE

DRAWING APPROVALS
DSN 10/25/01
DRW 10/25/01
CHK 10/25/01
DEPT
PE 11/1/01
PJ 11/2/01
REQ
REV. 0 DATE 10/25/01
UTB 11/2/01

Knight/Jacobs Joint Venture
701 Scarboro Road, MS 8253
Oak Ridge, TN 37830
865-241-9433
fax 865-241-3400

MERRICK Engineers & Architects

UT-BATTELLE
Oak Ridge National Laboratory, managed by UT-Battelle, LLC, for the U.S. Dept. of Energy under contract DE-AC05-00OR22725

108030700-J8E-8700-A002

PROJECT NAME:
SPALLATION NEUTRON SOURCE

TARGET BUILDING
ELECTRICAL INSTALLATION DETAILS

1	48	49	50	PLANT	BLDG	FL	SH.	OF	TYPE	CLASS
3	J	X	X	8	8700		1	1	G	U
51		52		53	WBS					REV
NC		NA		IN	1.8.3.7		J1.10.30			0

J1.10.30