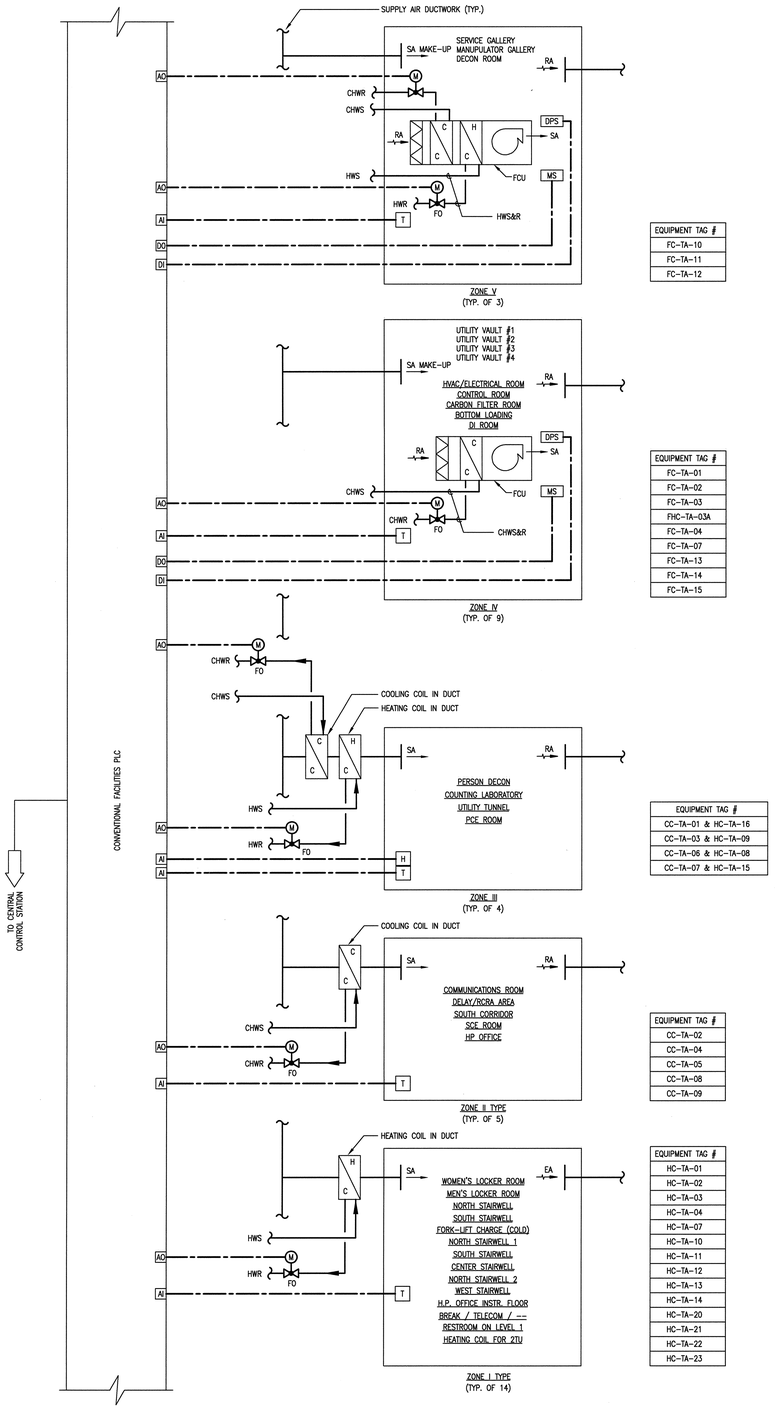

EQUIPMENT TAG #
FC-TA-10
FC-TA-11
FC-TA-12

EQUIPMENT TAG #
FC-TA-01
FC-TA-02
FC-TA-03
FHC-TA-03A
FC-TA-04
FC-TA-07
FC-TA-13
FC-TA-14
FC-TA-15

EQUIPMENT TAG #
CC-TA-01 & HC-TA-16
CC-TA-03 & HC-TA-09
CC-TA-06 & HC-TA-08
CC-TA-07 & HC-TA-15

EQUIPMENT TAG #
CC-TA-02
CC-TA-04
CC-TA-05
CC-TA-08
CC-TA-09

EQUIPMENT TAG #
HC-TA-01
HC-TA-02
HC-TA-03
HC-TA-04
HC-TA-07
HC-TA-10
HC-TA-11
HC-TA-12
HC-TA-13
HC-TA-14
HC-TA-20
HC-TA-21
HC-TA-22
HC-TA-23

CONTROL POINT LIST - TYPICAL TARGET BUILDING BASEMENT AIR HANDLER AH-TA-09 ZONES

BUILDING: TARGET MAKE UP AIR HANLDER UNIT ZONES

POINT DESCRIPTION	GRAPHIC DISPLAY(WINDOWS BASED SOFTWARE)	OUTPUT FROM DDC – DIGITAL: CONTROL RELAY	HANDS/OFF/AUTO	OPEN/CLOSE	OUTPUT FROM DDC – ANALOG: CONTROL POINT ADJUSTMENT	PROPORTIONAL CONTROL	INPUT TO DDC – DIGITAL: CONTACT CLOSURE	PULSE	DIFFERENTIAL PIPES SWITCH	PRESSURE SWITCH	AUXILLARY CONTACT	GENERAL ALARM	INPUT TO DDC – ANALOG: TEMPERATURE (F)	% RELATIVE HUMIDITY	PSIG, PSIA, PSID	POSITION SENSOR	FLOW	SOFTWARE – ALARMS – DIGITAL: CONTACT CLOSURE/DIRTY FILTER	CONTACT CLOSURE/EQUIPMENT FAILURE		ALARMS – ANALOG: HIGH LIMIT	LOW LIMIT	RUN TIME		APPLICATIONS: DUTY CYCLING	START/STOP	ECONOMIZER OFF/AUTO	REHEAT COIL RESET	LEAD/LAG	CHILLED WATER RESET	FAILURE MODE
ZONE 1 TYPE (TYP. OF 14)	X																														
– REHEAT COIL CONTROL VALVE	X					X							X																		
– TEMPERATURE SENSOR	X																														
ZONE II TYPE (TYP. OF 5)	X																														
– COOLING COIL CONTROL VALVE	X					X																									
– TEMPERATURE SENSOR	X												X																		
ZONE III TYPE (TYP. OF 4)	X																														
– HEATING COIL CONTROL VALVE	X					X																									
– COOLING COIL CONTROL VALVE	X					X																									
– SPACE TEMPERATURE SENSOR	X												X																		
– SPACE HUMIDITY SENSOR	X													X																	
ZONE IV TYPE (TYP. OF 9)	X																														
– COOLING COIL CONTROL VALVE	X					X							X																		
– SPACE TEMPERATURE	X																														
– FAN-COIL UNIT START/STOP	X	X																								X					
– FAN-COIL UNIT STATUS	X								X										X				X								
ZONE V TYPE (TYP. OF 3)	X																														
– COOLING COIL CONTROL VALVE	X					X																									
– HEATING COIL CONTROL VALVE	X					X																									
– SPACE TEMPERATURE SENSOR	X												X																		
– FAN-COIL UNIT START/STOP	X	X																								X					
– FAN-COIL UNIT STATUS	X								X										X				X								

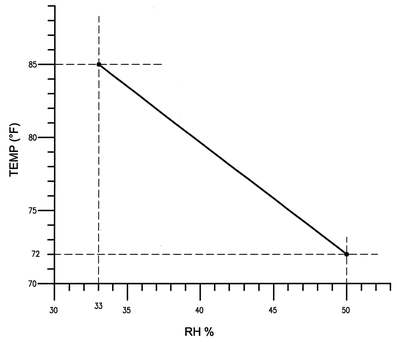

ZONE III HUMIDITY RESET SCHEDULE

SEQUENCE OF OPERATION

1. GENERAL:
BASEMENT AIR HANDLING SYSTEM AH-TA-09 SHALL BE ENERGIZED THROUGH THE CONTROL SYSTEM AND SHALL RUN CONTINUOUSLY. ROOF EXHAUST FAN EF-TA-09 & 10 SHALL BE INTERLOCKED WITH THE SUPPLY FAN AS DESCRIBED ON DWG. H8.40.06.

2. ZONE TEMPERATURE CONTROL:
THERE ARE FIVE TYPES OF ZONES:
   I. TERMINAL RE-HEAT CONTROL.
   II. TERMINAL COOLING CONTROL.
   III. TERMINAL COOLING & RE-HEAT CONTROL AS REQUIRED.
   IV. FAN-COIL UNIT ASSISTED HEATING OR COOLING CONTROL.
   V. FAN-COIL UNIT ASSISTED HEATING AND COOLING CONTROL.

3. TYPICAL ZONE CONTROL:
EACH ZONE TEMPERATURE SENSOR SHALL PROVIDE INPUT TO THE CONVENTIONAL FACILITIES PLC CONTROL SYSTEM. THE CONTROL SYSTEM IN RESPONSE TO THE HEAT OR COOL CALL SHALL MODULATE THE ZONE HEATING OR COOLING COIL TEMPERATURE CONTROL VALVE AS REQUIRED TO MAINTAIN DESIRED SPACE TEMPERATURE.

4. ZONE III HAS DE-HUMIDIFICATION CONTROL:
THIS IS REQUIRED IN AREAS THAT ARE LOCATED ADJACENT TO SCE AREAS, AS AIR FROM THE ADJACENT SPACES WILL BE PULLED INTO THE SCE AREAS.

THE SPACE HUMIDITY SENSOR SHALL PROVIDE INPUT TO THE CONTROL SYSTEM. SHOULD THE SPACE RELATIVE HUMIDITY RISE ABOVE VALVE SHOWN IN RESET SCHEDULE BELOW, THE CONTROL SYSTEM SHALL MODULATE OPEN THE CHILLED WATER CONTROL VALVE AS REQUIRED TO MAINTAIN THE RESET SPACE HUMIDITY SET POINT.

NO REPRESENTATION OR WARRANTY, EXPRESSED OR IMPLIED, IS MADE AS TO THE ACCURACY, COMPLETENESS OR USEFULNESS OF THE INFORMATION OR STATEMENTS CONTAINED IN THESE DRAWINGS, OR THAT THE USE OR DISCLOSURE OF ANY INFORMATION, APPARATUS, METHOD, OR PROCESS DISCLOSED IN THESE DRAWINGS MAY NOT INFRINGE PRIVATE RIGHTS OF OTHERS. NO LIABILITY IS ASSUMED WITH RESPECT TO THE USE OF, OR FOR DAMAGES RESULTING FROM THE USE OF ANY INFORMATION, APPARATUS, METHOD, OR PROCESS DISCLOSED IN THESE DRAWINGS. DRAWINGS MADE AVAILABLE FOR INFORMATION TO BIDDER ARE NOT TO BE USED FOR OTHER PURPOSES AND ARE TO BE RETURNED UPON REQUEST OF THE FORWARDING CONTRACTOR.

NUMBER OF SECTION OR DETAIL
DRAWING ON WHICH SECTION OR DETAIL IS SHOWN OR TAKEN
SECTION AND DETAIL KEY

THIS DOCUMENT CONTROLLED BY
CHANGE CONTROL SYSTEM 3
ENGINEERING PROCEDURE SNS-ENG-0001

REV	CHANGE TYPE	CHANGE CONTROL SYSTEM	CHANGE REQUEST NUMBER	DESCRIPTION	DSN	CHK	DEPT
A				ISSUED FOR REFERENCE – 10/26/01	MMK	BWJ	

REVISION OR ISSUE PURPOSE

DATE	PE	DATE	PJ	DATE	REQ	DATE	UTB	DATE	RPE	RPE NO	DATE
									BWJ	105869	10/26/01

REVISION APPROVALS

ST	CV	EC	EE	EM	IE	M	PD	SE	AR
REW	–	WRS	AK	WRS	BWJ	–	MP	–	ED

SQUAD CHECK

RPE
FOR REFERENCE ONLY
REV. DATE
DRAWING APPROVALS

DSN	M.KEHOE	10/26/01
DRW	J.STEIN	10/26/01
CHK	B.JOHNSON	10/26/01
DEPT		
PE		
PJ		
REQ		
UTB		

108030700-H8E-8700-A085

Knight/Jacobs Joint Venture
701 Scarboro Road, MS 8253
Oak Ridge, TN 37830
865-241-9433
fax 865-241-3400
KNIGHT
Knight Advanced Technology
549 West Randolph Street
Chicago, IL 60661

Oak Ridge National Laboratory
managed for the DEPARTMENT OF ENERGY under U.S. GOVERNMENT contract DE-AC05-00OR22725
UT-BATTELLE, LLC, ◆ Oak Ridge, Tennessee

PROJECT NAME:
SPALLATION NEUTRON SOURCE

TARGET BUILDING BASEMENT COIL CONTROL DIAGRAM

1	48	49	50	PLANT	BLDG	FL	SH.	OF	TYPE	CLASS
3	H	X	X	8	8700		1	1	D	U
51		52		53	WBS		H8.40.07			REV
NC		NA			1.8.3.7					A

Date: 10/23/2001 Time: 18:48:48
Username: TJHE
KBIFS_VOL2/PROJECTS/7000/700_CAD/CMDK_SA/H2_PLOT/H-40-07.DWG
AutoCAD