GENERAL NOTES:

A. 1.8 REFERS TO CONVENTIONAL FACILITIES. 1.6 REFERS TO TARGET SYSTEMS/TARGET UTILITIES. SCOPE OF WORK.

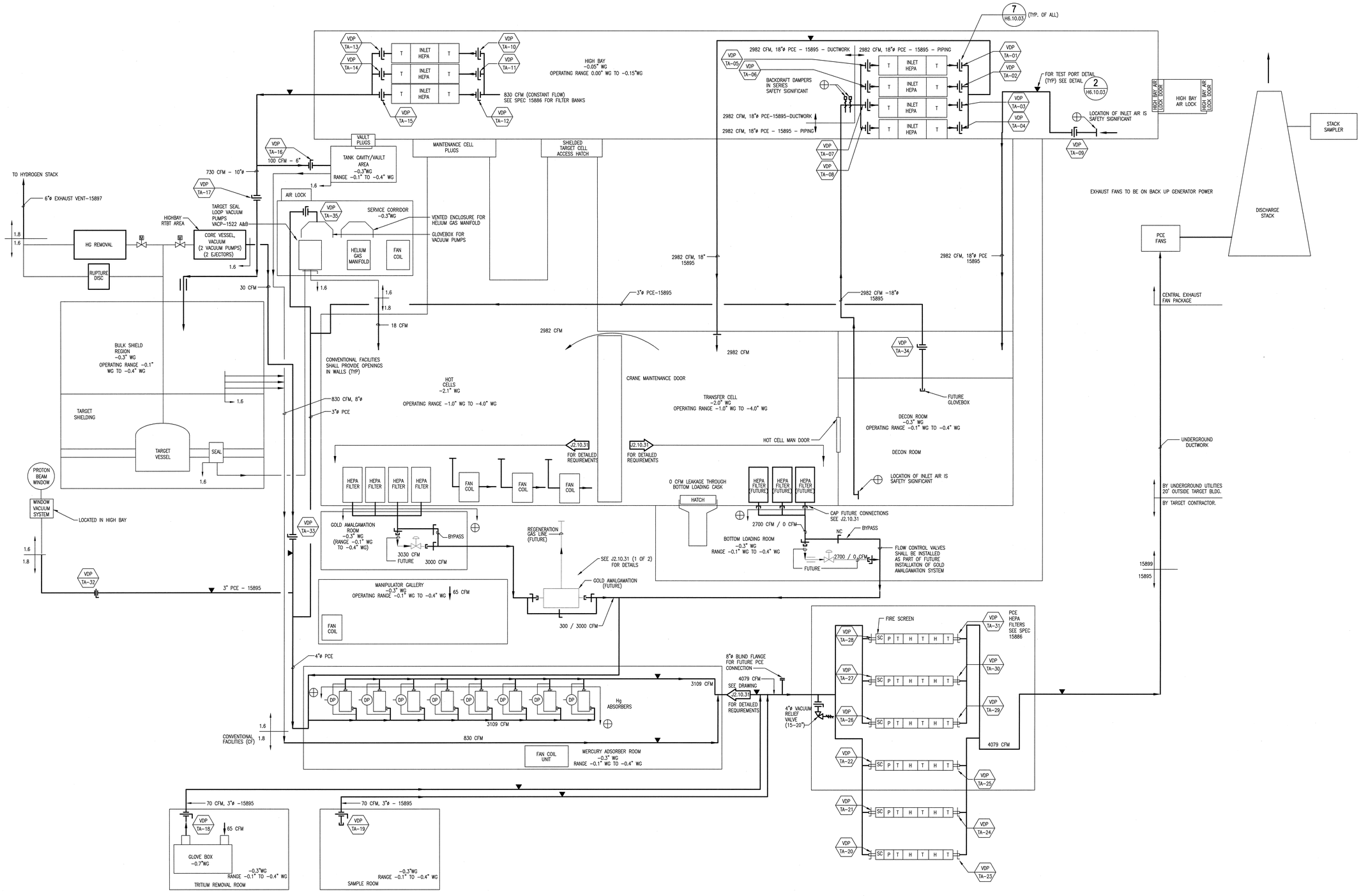

NO REPRESENTATION OR WARRANTY, EXPRESSED OR IMPLIED, IS MADE AS TO THE ACCURACY, COMPLETENESS OR USEFULNESS OF THE INFORMATION OR STATEMENTS CONTAINED IN THESE DRAWINGS, OR THAT THE USE OR DISCLOSURE OF ANY INFORMATION, APPARATUS, METHOD, OR PROCESS DISCLOSED IN THESE DRAWINGS MAY NOT INFRINGE PRIVATE RIGHTS OF OTHERS. NO LIABILITY IS ASSUMED WITH RESPECT TO THE USE OF, OR FOR DAMAGES RESULTING FROM THE USE OF ANY INFORMATION, APPARATUS, METHOD, OR PROCESS DISCLOSED IN THESE DRAWINGS. DRAWINGS MADE AVAILABLE FOR INFORMATION TO BIDDER ARE NOT TO BE USED FOR OTHER PURPOSES AND ARE TO BE RETURNED UPON REQUEST OF THE FORWARDING CONTRACTOR.

NUMBER OF SECTION OR DETAIL — DRAWING ON WHICH SECTION OR DETAIL IS SHOWN OR TAKEN

SECTION AND DETAIL KEY

THIS DOCUMENT CONTROLLED BY

CHANGE CONTROL SYSTEM 3

ENGINEERING PROCEDURE SNS-ENG-G001

REV	CHANGE TYPE	CHANGE CONTROL SYSTEM	CHANGE REQUEST NUMBER	DESCRIPTION	DSN	CHK	DEPT
0				CERTIFIED FOR CONSTRUCTION - 11/13/01	MMK	BWJ	

REVISION OR ISSUE PURPOSE

DATE	PE	DATE	PJ	DATE	REQ	DATE	UTB	DATE	RPE	RPE NO	DATE
	RAD	11/13/01	RAD	11/14/01				11/14/01	BWJ	105869	11/13/01

REVISION APPROVALS

ST	CV	EC	EE	EM	IE	M	PD	SE	AR
REW	–	WRS	AK	WRS	BWJ	–	MP	–	ED

SQUAD CHECK

RPE: BRUCE W. JOHNSON, REGISTERED ENGINEER, AGRICULTURE, No. 00105818, STATE OF TENNESSEE

REV.	DATE
0	11/13/01

DRAWING APPROVALS

DSN	M.KEHOE	11/13/01
DRW	J.STEIN	11/13/01
CHK	B.JOHNSON	11/13/01
DEPT		
PE	R.D. Hansen	11/14/01
PJ	R.A. Dean	11/14/01
REQ		
UTB	J. Jackson	11/14/01

108030700-H8E-8700-A064

Knight/Jacobs Joint Venture
701 Scarboro Road, MS 8253
Oak Ridge, TN 37830
865-241-9433
fax 865-241-3400

KNIGHT
Knight Advanced Technology
343 West Randolph Street
Chicago, IL 60601

UT-BATTELLE

Oak Ridge National Laboratory
managed for the DEPARTMENT OF ENERGY under
U.S. GOVERNMENT contract DE-AC05-00OR22725
UT-BATTELLE, LLC. © Oak Ridge, Tennessee

PROJECT NAME:
SPALLATION NEUTRON SOURCE

TARGET BUILDING PCE FLOW DIAGRAM

1	48	49	50	PLANT	BLDG	FL	SH.	OF	TYPE	CLASS
3	H	X	X	8	8700		1	1	D	U
51		52		53	WBS					REV
NC		NA			1.8.3.7		H7.40.33			0

AutoCAD

Date: 11/13/2001 Time: 08:58:27
Username: TUBBS
H:\SPS_WS\PROJECT\7000\700_CAD\D\SNA_SA\H8_PLOT\07-40-33.DWG