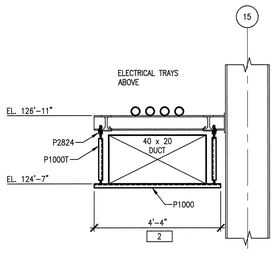

10 H2.02.47 H2.02.49 **DUCT SUPPORT (TYP.)**
SCALE: 1/2" = 1'-0"

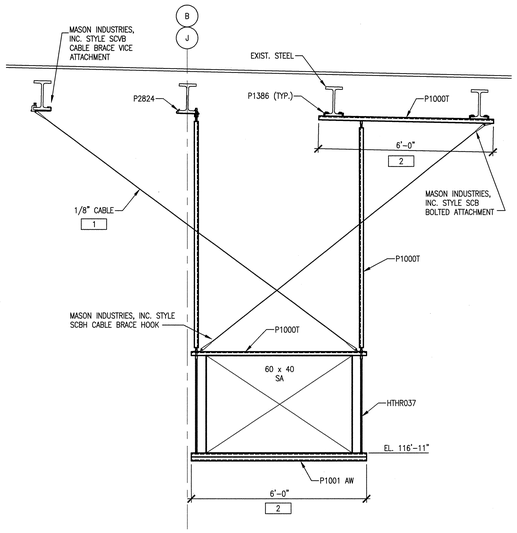

7 H2.04.41 H2.04.43 H2.04.47 H2.04.49 **DUCT SUPPORT (TYP.)**
SCALE: 1/2" = 1'-0"

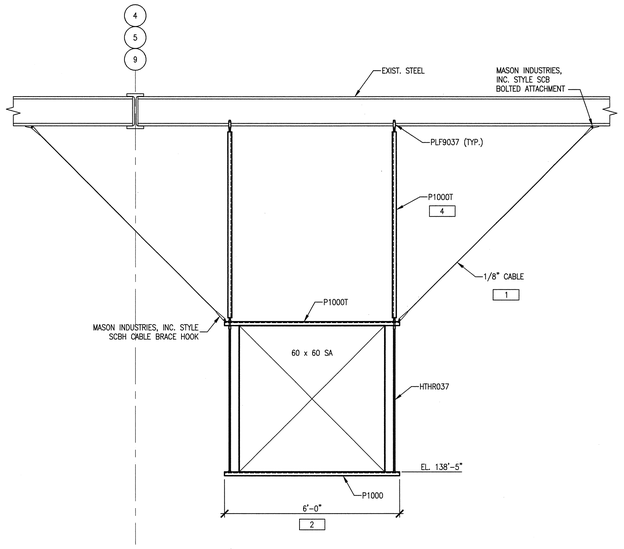

5 H2.04.41 H2.04.43 H2.04.44 H2.04.46 **DUCT SUPPORT (TYP.)**
SCALE: 1/2" = 1'-0"

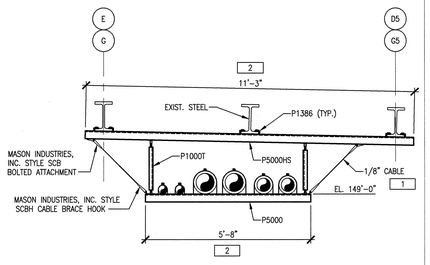

1 H2.04.44 H2.04.46 **PIPE SUPPORT (TYP.)**
SCALE: 1/2" = 1'-0"

KEY NOTES:

1. DETAILS ONLY SHOW LATERAL BRACING. CONTRACTOR SHALL PROVIDE LONGITUDINAL BRACING OF THE SAME TYPE AT EVERY OTHER SUPPORT.
2. CONTRACTOR SHALL VERIFY ALL DIMENSIONS. ACTUAL DIMENSIONS AND LOCATIONS ARE DEPENDENT ON FIELD CONDITIONS. COORDINATE WITH CONSTRUCTION MANAGER BEFORE FABRICATION AND/OR INSTALLATION.
3. LENGTH OF UNISTRUT WILL VARY WITH PIPE SLOPE.
4. LENGTH OF UNISTRUT WILL VARY WITH STEEL ELEVATION.

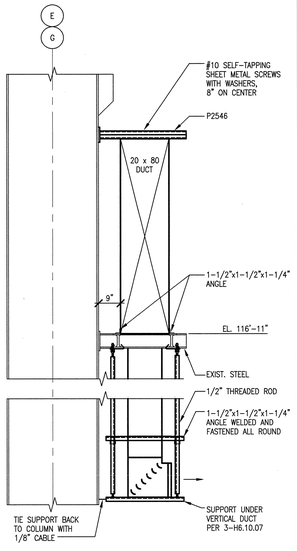

11 H2.02.44 H2.02.46 **DUCT SUPPORT (TYP.)**
SCALE: 1/2" = 1'-0"

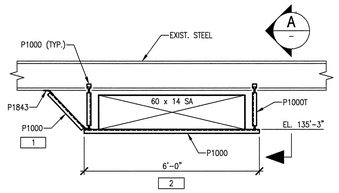

8 H2.03.41 H2.03.43 **DUCT SUPPORT (TYP.)**
SCALE: 1/2" = 1'-0"

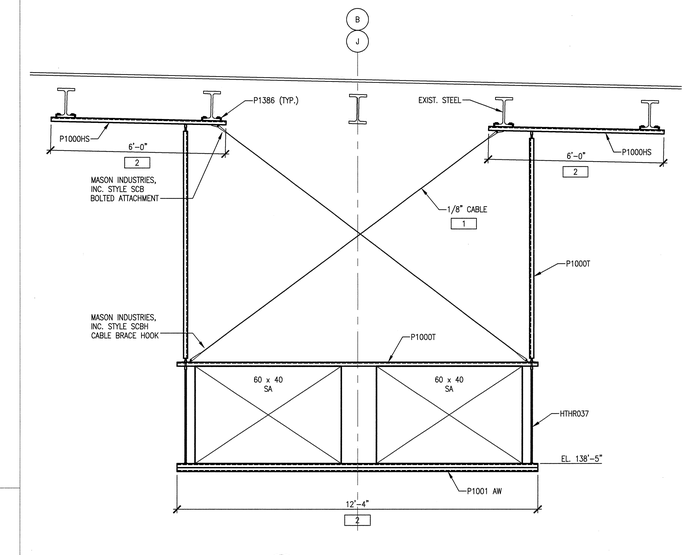

6 H2.04.41 H2.04.43 **DUCT SUPPORT (TYP.)**
SCALE: 1/2" = 1'-0"

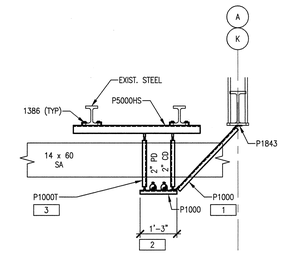

4 H2.03.41 H2.03.43 **PIPE SUPPORT (TYP.)**
SCALE: 1/2" = 1'-0"

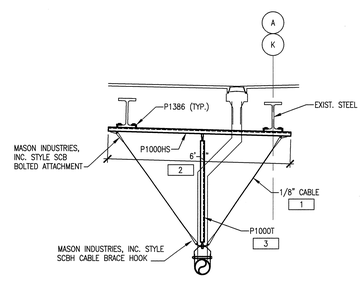

3 P2.04.41 H2.04.43 **PIPE SUPPORT (TYP.)**
SCALE: 1/2" = 1'-0"

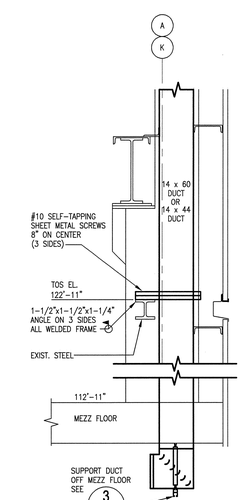

12 ** H2.03.41, 43, 44, 46, 47, 49 **DUCT SUPPORT (TYP.)**
SCALE: 1/2" = 1'-0"

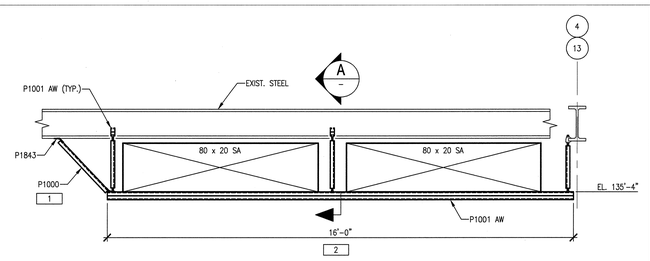

9 H2.03.41 H2.03.43 H2.03.47 H2.03.49 **DUCT SUPPORT (TYP.)**
SCALE: 1/2" = 1'-0"

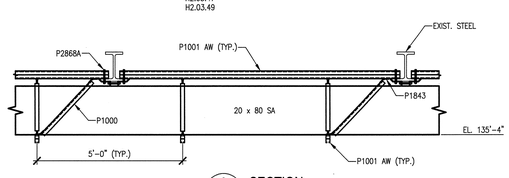

A – **SECTION**
SCALE: 1/2" = 1'-0"

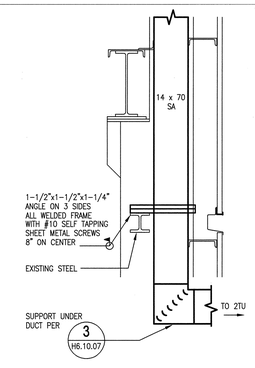

14 H2.01.43 H2.02.43, H2.03.43 **FOR 70 x 14 DUCT**
SCALE: 1/2" = 1'-0"

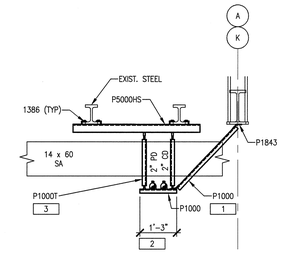

4 H2.03.41 H2.03.43 **PIPE SUPPORT (TYP.)**
SCALE: 1/2" = 1'-0"

2' 1' 0 2' 4'
SCALE: 1/2" = 1'-0"

108000000-H8E-8000-A015

Knight/Jacobs Joint Venture
701 Scarboro Road, MS 8253
Oak Ridge, TN 37830
865-241-9433
fax 865-241-3400

KNIGHT
Knight Advanced Technology
1403 Mission Street
San Francisco, CA 94103

Oak Ridge National Laboratory
managed for the DEPARTMENT OF ENERGY under
U.S. GOVERNMENT contract DE-AC05-00OR22725
UT-BATTELLE, LLC. © Oak Ridge, Tennessee

PROJECT NAME:
SPALLATION NEUTRON SOURCE

STANDARD MECHANICAL DETAILS
SHEET 11 OF 11

1	48	49	50	PLANT	BLDG	FL	SH.	OF	TYPE	CLASS
3	H	X	X	8	8000		1	1	S	U

51	52	53	WBS	REV
NC	NA		1.8	0

H6.10.14

DSN	B. JOHNSON	11/13/01
DRW	J. STEIN	11/13/01
CHK	B. JOHNSON	11/13/01
DEPT		
PE		11/13/01
~~PI~~		11/14/01
REQ		
UTB		11/14/01

RPE
BRUCE W. JOHNSON
REGISTERED ENGINEER
AGRICULTURE
LONDON
No. 00109349
STATE OF TENNESSEE

0 11/13/01
REV. DATE
DRAWING APPROVALS

REV	CHANGE TYPE	CHANGE CONTROL SYSTEM	CHANGE REQUEST NUMBER	DESCRIPTION	DSN	CHK	DEPT
0				CERTIFIED FOR CONSTRUCTION – 11/13/01	MMK	BWJ	

REVISION OR ISSUE PURPOSE

DATE	PE	DATE	PJ	DATE	REQ	DATE	UTB	DATE
11/14/01								

REVISION APPROVALS

DATE	RPE	RPE NO	DATE
11/13/01	BWJ	105869	11/13/01

REW	–	WRS	AK	WRS	BWJ	–	MP	–	ED
ST	CV	EC	EE	EM	IE	M	PD	SE	AR

SQUAD CHECK

NO REPRESENTATION OR WARRANTY, EXPRESSED OR IMPLIED, IS MADE AS TO THE ACCURACY, COMPLETENESS OR USEFULNESS OF THE INFORMATION OR STATEMENTS CONTAINED IN THESE DRAWINGS, OR THAT THE USE OR DISCLOSURE OF ANY INFORMATION, APPARATUS, METHOD, OR PROCESS DISCLOSED IN THESE DRAWINGS MAY NOT INFRINGE PRIVATE RIGHTS OF OTHERS. NO LIABILITY IS ASSUMED WITH RESPECT TO THE USE OF, OR FOR DAMAGES RESULTING FROM THE USE OF ANY INFORMATION, APPARATUS, METHOD, OR PROCESS DISCLOSED IN THESE DRAWINGS. DRAWINGS MADE AVAILABLE FOR INFORMATION TO BIDDER ARE NOT TO BE USED FOR OTHER PURPOSES AND ARE TO BE RETURNED UPON REQUEST OF THE FORWARDING CONTRACTOR.

NUMBER OF SECTION OR DETAIL
DRAWING ON WHICH SECTION OR DETAIL IS SHOWN OR TAKEN
SECTION AND DETAIL KEY

THIS DOCUMENT CONTROLLED BY
CHANGE CONTROL SYSTEM 4
ENGINEERING PROCEDURE SNS-ENG-0001

Date: 11/13/2001 Time: 15:56:28
Filename: H8E-8000-A015
H8E8_HELPPACKETS\TMOC\TOL\DWGS\MK_MT\MS_PLOT\H6-10-14.DWG

AutoCAD