NEXT ASS'Y   FINAL ASS'Y

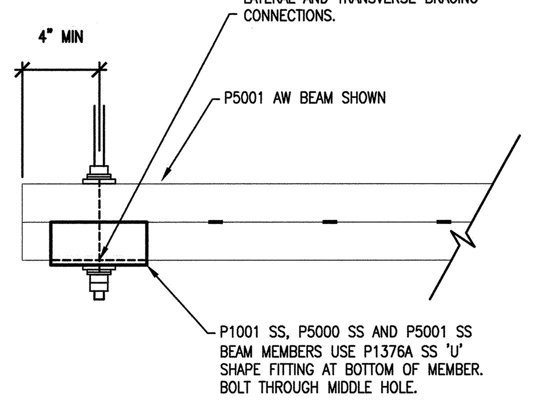

6 / ** DETAIL - P1001 AW, P5000 AND P5001 AW CONNECTION TO VERTICAL ROD

NO SCALE

** H6.10.05, 06, 07, 08, 09

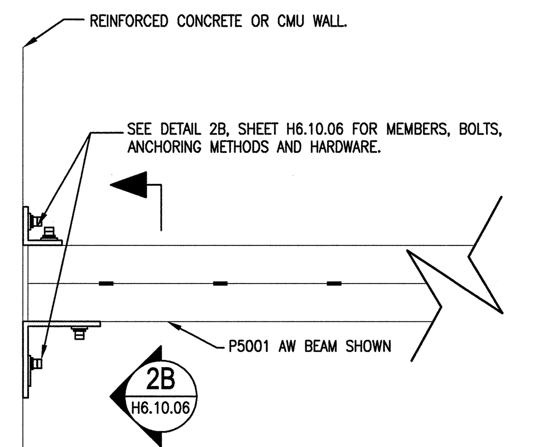

3 / ** DETAIL - P1001 AW AND P5001 AW CONNECTION TO REINFORCED CONCRETE WALL (WHERE INDICATED ON PLAN DRAWINGS)

NO SCALE

** H6.10.05, 06, 07, 08, 09

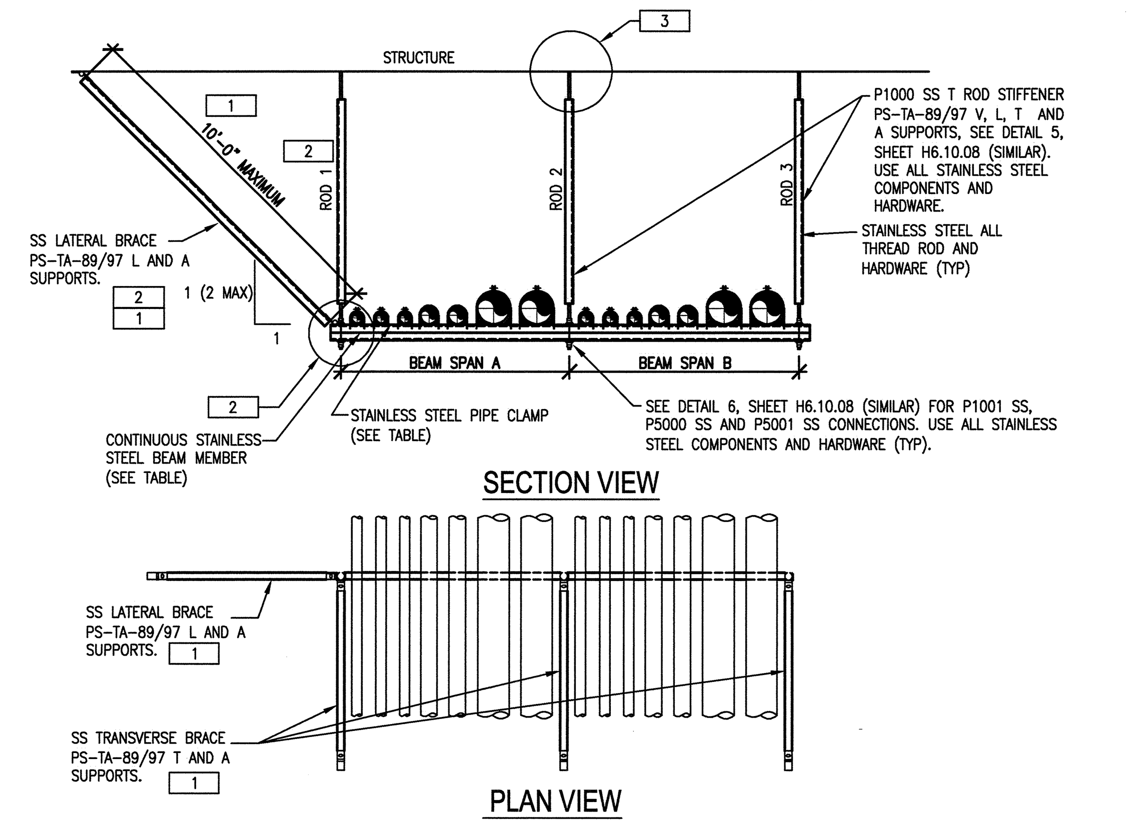

TABLE 8.1-1

ROD 1, ROD 3 AND BEAM MINIMUM SIZING TABLE FOR SPAN A / SPAN B LESS THAN OR EQUAL TO 4'-0"

LARGEST PIPE DIAMETER (INCHES)	MAXIMUM NUMBER OF PIPES	ROD 1/ROD 3 MINIMUM ALL THREAD ROD DIAMETER (INCHES)	MINIMUM** BEAM MEMBER	MAXIMUM PIPING + WATER WEIGHT (LBS)	MAXIMUM HORIZONTAL SPACING (FEET)
1	10	3/8" – 16	P1000 SS	103	5
2	10	3/8" – 16	P1000 SS	510	10
3	8	1/2" – 13	P1001 SS AW	862	10
4	7	1/2" – 13	P1001 SS AW	1256	10
* 6	6	5/8" – 11	P1001 SS AW	1898	10
* 8	5	5/8" – 11	P5001 SS AW	2508	10
* 10	4	3/4" – 10	P5001 SS AW	2983	10

TABLE 8.1-2

ROD 1, ROD 3 AND BEAM MINIMUM SIZING TABLE FOR SPAN A OR SPAN B GREATER THAN 4'-0" AND LESS THAN OR EQUAL TO 6'-0"

LARGEST PIPE DIAMETER (INCHES)	MAXIMUM NUMBER OF PIPES	ROD 1/ROD 3 MINIMUM ALL THREAD ROD DIAMETER (INCHES)	MINIMUM ** BEAM MEMBER	MAXIMUM PIPING + WATER WEIGHT (LBS)	MAXIMUM HORIZONTAL SPACING (FEET)
1	15	3/8" – 16	P1000 SS	154	5
2	15	3/8" – 16	P1001 SS AW	765	10
3	12	1/2" – 13	P1001 SS AW	1294	10
* 4	11	5/8" – 11	P5000 SS	1793	10
* 6	8	5/8" – 11	P5001 SS AW	2517	10
* 8	7	3/4" – 10	P5001 SS AW	3511	10
* 10	5	3/4" – 10	P5001 SS AW	3729	10

* DOUBLE RACK MAY NOT BE ALLOWED. SEE TABLE 8.1-4, 8.1-5 AND 8.1-6

** MINIMUM CONTINUOUS BEAM MEMBER SHALL BE AS REQUIRED FOR THE LARGEST PIPE ON SPAN A AND SPAN B

1 / 7,H6.10.06 PS-TA-89 (V, T, L AND A) TYPICAL STAINLESS STEEL DOUBLE LENGTH PIPING TRAPEZE SUPPORT (SHIELDED AREAS) AND PS-TA-97 (V, T, L AND A) TYPICAL DOUBLE LENGTH PIPING TRAPEZE SUPPORT (SUPPORT AREAS)

SCALE: NO SCALE

5
- PS-TA-89V VERTICAL
- PS-TA-89L VERTICAL AND LATERAL
- PS-TA-89T VERTICAL AND TRANSVERSE
- PS-TA-89A VERTICAL, LATERAL AND TRANSVERSE

4
- PS-TA-97V VERTICAL
- PS-TA-97L VERTICAL AND LATERAL
- PS-TA-97T VERTICAL AND TRANSVERSE
- PS-TA-97A VERTICAL, LATERAL AND TRANSVERSE

TABLE 8.1-4

MIDDLE ROD (ROD 2) SIZING TABLE FOR SPAN A AND SPAN B EACH OF 4'-0" OR LESS

SPAN A LARGEST PIPE DIAMETER (INCHES)	SPAN B LARGEST PIPE DIAMETER (INCHES) 1	2	3	4	6	8	10
1	3/8" – 16	3/8" – 16	1/2" – 13	1/2" – 13	5/8" – 11	5/8" – 11	3/4" – 10
2	3/8" – 16	1/2" – 13	1/2" – 13	1/2" – 13	5/8" – 11	3/4" – 10	3/4" – 10
3	1/2" – 13	1/2" – 13	5/8" – 11	5/8" – 11	3/4" – 10	3/4" – 10	3/4" – 10
4	1/2" – 13	1/2" – 13	5/8" – 11	5/8" – 11	3/4" – 10	3/4" – 10	3/4" – 10
6	5/8" – 11	5/8" – 11	3/4" – 10	3/4" – 10	3/4" – 10	NOT ALLOWED	NOT ALLOWED
8	5/8" – 11	3/4" – 10	3/4" – 10	3/4" – 10	NOT ALLOWED	NOT ALLOWED	NOT ALLOWED
10	3/4" – 10	3/4" – 10	3/4" – 10	3/4" – 10	NOT ALLOWED	NOT ALLOWED	NOT ALLOWED

TABLE 8.1-5

MIDDLE ROD (ROD 2) SIZING TABLE FOR SPAN A AND SPAN B EACH LARGER THAN 4'-0" AND LESS THAN 6'-0"

SPAN A LARGEST PIPE DIAMETER (INCHES)	SPAN B LARGEST PIPE DIAMETER (INCHES) 1	2	3	4	6	8	10
1	3/8" – 16	1/2" – 13	5/8" – 11	5/8" – 11	5/8" – 11	7/8" – 9	7/8" – 9
2	1/2" – 13	5/8" – 11	5/8" – 11	3/4" – 10	3/4" – 10	NOT ALLOWED	NOT ALLOWED
3	5/8" – 11	5/8" – 11	5/8" – 11	3/4" – 10	3/4" – 10	NOT ALLOWED	NOT ALLOWED
4	5/8" – 11	3/4" – 10	3/4" – 10	3/4" – 10	NOT ALLOWED	NOT ALLOWED	NOT ALLOWED
6	5/8" – 11	3/4" – 10	3/4" – 10	NOT ALLOWED	NOT ALLOWED	NOT ALLOWED	NOT ALLOWED
8	7/8" – 9	NOT ALLOWED	NOT ALLOWED	NOT ALLOWED	NOT ALLOWED	NOT ALLOWED	NOT ALLOWED
10	7/8" – 9	NOT ALLOWED	NOT ALLOWED	NOT ALLOWED	NOT ALLOWED	NOT ALLOWED	NOT ALLOWED

TABLE 8.1-6

MIDDLE ROD (ROD 2) SIZING TABLE FOR ONE SPAN (A OR B) LESS THAN OR EQUAL TO 4'-0" AND THE SECOND SPAN (A OR B) GREATER THAN 4'-0" AND LESS THAN OR EQUAL TO 6'-0"

SHORTEST OF SPANS A AND B LARGEST PIPE DIAMETER (INCHES)	LONGEST OF SPANS A AND B LARGEST PIPE DIAMETER (INCHES) 1	2	3	4	6	8	10
1	3/8" – 16	1/2" – 13	1/2" – 13	1/2" – 13	5/8" – 11	3/4" – 10	3/4" – 10
2	3/8" – 16	1/2" – 13	5/8" – 11	5/8" – 11	5/8" – 11	3/4" – 10	NOT ALLOWED
3	1/2" – 13	5/8" – 11	5/8" – 11	5/8" – 11	3/4" – 10	NOT ALLOWED	NOT ALLOWED
4	1/2" – 13	5/8" – 11	5/8" – 11	3/4" – 10	3/4" – 10	NOT ALLOWED	NOT ALLOWED
6	5/8" – 11	5/8" – 11	3/4" – 10	3/4" – 10	NOT ALLOWED	NOT ALLOWED	NOT ALLOWED
8	3/4" – 10	3/4" – 10	3/4" – 10	NOT ALLOWED	NOT ALLOWED	NOT ALLOWED	NOT ALLOWED
10	3/4" – 10	3/4" – 10	NOT ALLOWED	NOT ALLOWED	NOT ALLOWED	NOT ALLOWED	NOT ALLOWED

DETAIL KEYNOTES:

1. SEE DETAIL 8, SHEET H6.10.08 FOR LATERAL AND LONGITUDINAL BRACING REQUIREMENTS (SIM). USE STRUCTURAL STAINLESS STEEL MEMBERS AND HARDWARE.
2. SUBSTITUTE CONNECTIONS SIMILAR TO THAT SHOWN IN DETAIL 2, SHEET H6.10.08 IN PLACE OF LATERAL SUPPORT AND VERTICAL ROD AT LOCATIONS AT REINFORCED CONCRETE WALLS WHERE INDICATED ON THE PLAN DRAWINGS. USE ALL STAINLESS STEEL COMPONENTS ANCHORS AND HARDWARE.
3. SEE DETAIL 2, SHEET H6.10.08 (SIMILAR) FOR CONNECTION TO CONCRETE WHERE APPLICABLE. USE ALL STAINLESS STEEL COMPONENTS AND HARDWARE.
4. FOR SUPPORT AREA DOUBLE WIDTH TYPE TRAPEZE SUPPORTS, USE STANDARD MATERIAL STRUT, RODS AND HARDWARE IN LEU OF STAINLESS STEEL MATERIAL COMPONENTS.
5. ALL COMPONENTS INDICATED ARE FOR STAINLESS STEEL ASSEMBLIES TO BE USED IN SHIELDED AREAS. USE STANDARD MATERIALS IN UNSHIELDED SUPPORT AREAS (PS-TA-97 SERIES SUPPORTS).

TABLE 8.1-3

PIPE CLAMP TABLE

PIPE DIAMETER (INCHES)	CLAMP SERIES
1/2" THRU 6"	004T008 SS THRU 098N106 SS
8" THRU 10"	UB8PA SS THRU UB10PA SS

MINIMUM BRACING REQUIREMENTS:

BEAM MEMBER AND ROD TO BE SIZED BASED ON SPAN AND LARGEST PIPE SIZE ON TRAPEZE. SUPPORT SPACING TO BE AS REQUIRED FOR SMALLEST PIPE SIZE ON TRAPEZE. MAXIMUM HORIZONTAL SUPPORT SPACING SHALL NOT EXCEED THE VALUES INDICATED IN TABLES 8.1-1 AND 8.1-2.

ALL PIPE TO BE SUPPORTED WITHIN 18" OF CHANGES IN DIRECTION.

ALL PIPE TO BE SUPPORTED WITHIN 18" (EACH SIDE) OF VALVES, FLANGES AND FLOW METERS.

ALL PIPE TO BE SUPPORTED WITHIN 24" OF PENETRATIONS THROUGH WALLS.

INSTALL TRANSVERSE BRACING AT EVERY OTHER SUPPORT LOCATION.

INSTALL LATERAL BRACING AT MAXIMUM SPACING OF 20 FT.

INSTALL VERTICAL BRACING AT ALL SUPPORT LOCATIONS.

INSTALL VERTICAL LATERAL AND TRANSVERSE SUPPORTS AT OPPOSING ENDS OF STRAIGHT RUNS, AND AT CHANGES OF DIRECTION.

INSTALL VERTICAL LATERAL AND TRANSVERSE SUPPORTS WITHIN 36" OF CONNECTIONS TO EQUIPMENT.

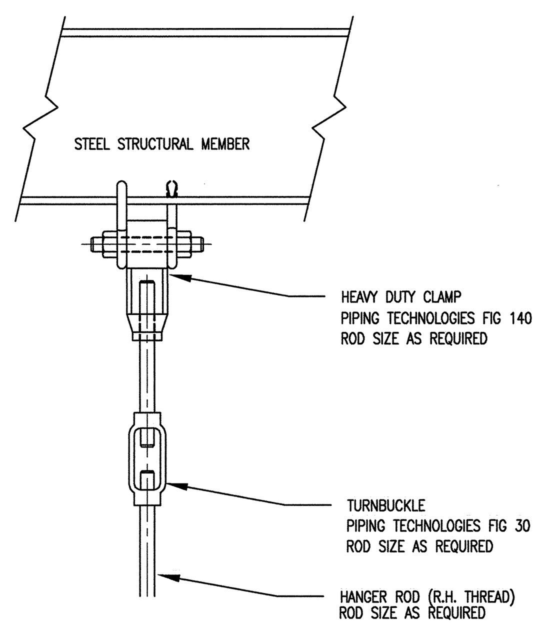

7 / – TYPICAL DETAIL - ALL THREAD ROD CONNECTIONS TO STEEL BEAM

NO SCALE

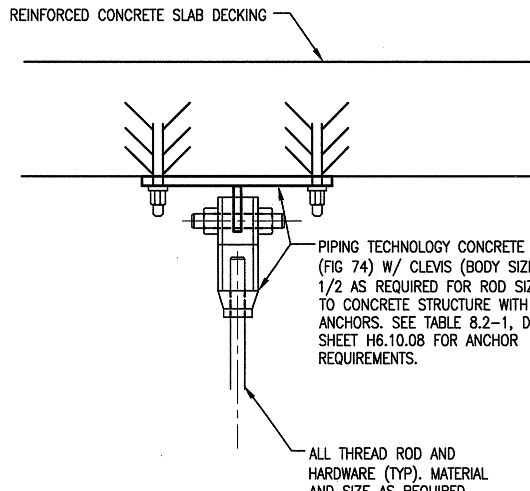

4 / – TYPICAL DETAIL - ALL THREAD ROD CONNECTIONS TO STRUCTURE

NO SCALE

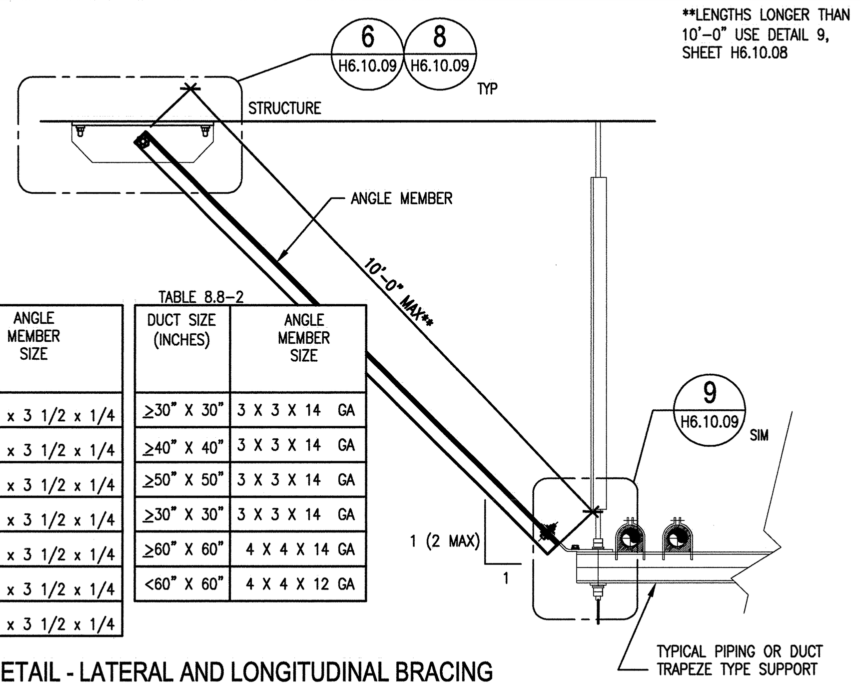

TABLE 8.8-1

LARGEST PIPE DIAMETER (INCHES)	ANGLE MEMBER SIZE
1	3 1/2 x 3 1/2 x 1/4
2	3 1/2 x 3 1/2 x 1/4
3	3 1/2 x 3 1/2 x 1/4
4	3 1/2 x 3 1/2 x 1/4
6	3 1/2 x 3 1/2 x 1/4
8	3 1/2 x 3 1/2 x 1/4
10	3 1/2 x 3 1/2 x 1/4

TABLE 8.8-2

DUCT SIZE (INCHES)	ANGLE MEMBER SIZE
≥30" X 30"	3 X 3 X 14 GA
≥40" X 40"	3 X 3 X 14 GA
≥50" X 50"	3 X 3 X 14 GA
≥30" X 30"	3 X 3 X 14 GA
≥60" X 60"	4 X 4 X 14 GA
<60" X 60"	4 X 4 X 12 GA

8 / ** DETAIL - LATERAL AND LONGITUDINAL BRACING REQUIREMENTS FOR TYPICAL TRAPEZE SUPPORTS

NO SCALE

**H6.10.05, 06, 07, 08, 09, 13

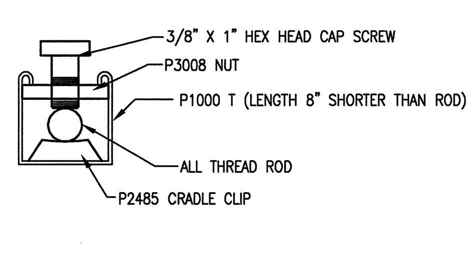

5 / – TYPICAL DETAIL - SECTION VIEW OF VERTICAL BRACING UNISTRUT TYPE CHANNEL STIFFENER

NO SCALE

TABLE 8.2-1

EXPANSION ANCHOR REQUIREMENTS FOR 4 BOLT CLEVIS PLATE

HANGER ROD SIZE (DIAMETER IN INCHES)	MAXIMUM LOAD ON CONCRETE CLEVIS PLATE (INCLUDING SEISMIC FORCES) (LBS)*	ANCHOR REQUIREMENT: CARBON STEEL BOLT DIAMETER (INCHES)	CARBON STEEL EMBEDMENT DEPTH (INCHES)**	STAINLESS STEEL BOLT DIAMETER (INCHES)	STAINLESS STEEL EMBEDMENT DEPTH (INCHES)**
3/8	680	1/2	3 1/2	1/2	3 1/2
1/2	1130	1/2	3 1/2	1/2	3 1/2
5/8	1810	1/2	3 1/2	1/2	3 1/2
3/4	2710	5/8	4	5/8	4
1	4960	3/4	4 3/4	3/4	4 3/4
1 1/4	8000	3/4	4 3/4	3/4	8

* LOAD ON SUPPORT MEMBERS SHALL NOT EXCEED THE MAXIMUM REPORTED ALLOWABLE CAPACITY OF THE ELEMENT.

** EMBEDMENT DEPTHS LESS THAN 3 1/2 INCHES ARE NOT ALLOWED.

TABLE 8.2-3

1. MIDDLE ROD (ROD 2) SPRING HANGER SELECTION TABLE FOR SPAN A AND SPAN B EACH OF 4'-0" OR LESS (DOUBLE LENGTH TRAPEZE SUPPORT)
2. SPRING HANGER SELECTION TABLE (DOUBLE HEIGHT TRAPEZE SUPPORT) SPANS OF 4'-0" OR LESS

1. SPAN A 2. TOP BEAM LARGEST PIPE DIAMETER (INCHES)	1. SPAN B LARGEST PIPE DIAMETER (INCHES) 2. BOTTOM BEAM LARGEST PIPE DIAMETER (INCHES) 1	2	3	4	6	8	10
1	X-130	B-410	C-630	C-800	C-1256	D-1575	D-2150
2	B-410	C-630	C-1010	C-1010	D-1575	D-2150	D-2150
3	C-630	C-1010	C-1256	C-1256	D-2150	D-2150	F-2760
4	C-800	C-1010	C-1256	D-1575	D-2150	F-2760	F-2760
6	C-1256	D-1575	D-2150	D-2150	F-2760	NOT ALLOWED	NOT ALLOWED
8	D-1575	D-2150	D-2150	F-2760	NOT ALLOWED	NOT ALLOWED	NOT ALLOWED
10	D-2150	D-2150	F-2760	F-2760	NOT ALLOWED	NOT ALLOWED	NOT ALLOWED

TABLE 8.2-4

1. MIDDLE ROD (ROD 2) SIZING TABLE FOR SPAN A AND SPAN B EACH LARGER THAN 4'-0" AND LESS THAN 6'-0" (DOUBLE LENGTH TRAPEZE SUPPORT)
2. SPRING HANGER SELECTION TABLE (DOUBLE HEIGHT TRAPEZE SUPPORT) SPANS LARGER THAN 4'-0" AND LESS THAN 6'-0"

1. SPAN A 2. TOP BEAM LARGEST PIPE DIAMETER (INCHES)	1. SPAN B LARGEST PIPE DIAMETER (INCHES) 2. BOTTOM BEAM LARGEST PIPE DIAMETER (INCHES) 1	2	3	4	6	8	10
1	X-210	C-630	C-800	C-1265	D-2150	F-2760	F-2760
2	C-630	C-1010	C-1265	D-1575	D-2150	NOT ALLOWED	NOT ALLOWED
3	C-800	C-1265	D-1575	D-2150	F-2760	NOT ALLOWED	NOT ALLOWED
4	C-1265	D-1575	D-2150	F-2760	NOT ALLOWED	NOT ALLOWED	NOT ALLOWED
6	D-2150	D-2150	F-2760	NOT ALLOWED	NOT ALLOWED	NOT ALLOWED	NOT ALLOWED
8	F-2760	NOT ALLOWED	NOT ALLOWED	NOT ALLOWED	NOT ALLOWED	NOT ALLOWED	NOT ALLOWED
10	F-2760	NOT ALLOWED	NOT ALLOWED	NOT ALLOWED	NOT ALLOWED	NOT ALLOWED	NOT ALLOWED

TABLE 8.2-5

MIDDLE ROD (ROD 2) SIZING TABLE FOR ONE SPAN (A OR B) LESS THAN OR EQUAL TO 4'-0" AND THE SECOND SPAN (A OR B) GREATER THAN 4'-0" AND LESS THAN OR EQUAL TO 6'-0" (DOUBLE LENGTH TRAPEZE SUPPORT)

SHORTEST OF SPANS A AND B LARGEST PIPE DIAMETER (INCHES)	LONGEST OF SPANS A AND B LARGEST PIPE DIAMETER (INCHES) 1	2	3	4	6	8	10
1	X-210	B-540	C-1010	C-1256	D-1575	F-2760	F-2760
2	B-410	C-800	C-1275	D-1575	D-2150	F-2760	NOT ALLOWED
3	C-630	C-1010	D-1575	D-2150	D-2150	NOT ALLOWED	NOT ALLOWED
4	C-800	C-1265	D-1461	D-2150	F-2760	NOT ALLOWED	NOT ALLOWED
6	C-1265	D-2150	D-2150	F-2760	NOT ALLOWED	NOT ALLOWED	NOT ALLOWED
8	D-2150	D-2150	F-2760	NOT ALLOWED	NOT ALLOWED	NOT ALLOWED	NOT ALLOWED
10	D-2150	F-2760	NOT ALLOWED	NOT ALLOWED	NOT ALLOWED	NOT ALLOWED	NOT ALLOWED

DETAIL GENERAL NOTES:

1. SPRING HANGER MODEL NUMBERS REFER TO MASON INDUSTRIES PC30 1" DEFLECTION, 30° SWING SPRING HANGER SERIES.

DETAIL KEYNOTES:

1. PIPING TECHNOLOGY CONCRETE CLEVIS PLATE (FIG 73) (SIZE AS REQUIRED FOR ROD SIZE). ANCHOR TO CONCRETE STRUCTURE WITH EXPANSION ANCHORS. SEE TABLE 8.2-1.
2. MASON INDUSTRIES PC30 SPRING HANGER W/ EYE BOLT TOP, SIZE AS REQUIRED (SEE TABLES 8.2-3 THROUGH 8.2-5 FOR SPECIFIC SIZE REQUIREMENTS).
3. TURNBUCKLE (PIPING TECHNOLOGIES FIG 30) ROD SIZE AS REQUIRED.
4. ALL THREAD ROD AND HARDWARE (TYP). MATERIAL AND SIZE AS REQUIRED.

TABLE 8.2-2

SELECTION TABLE FOR SINGLE LENGTH PIPING TRAPEZE SPRING HANGERS AND FOR ROD 1 AND ROD 3 SPRING HANGERS ON DOUBLE LENGTH TRAPEZE.

LARGEST PIPE DIAMETER ON TRAPEZE SPAN (INCHES)	SPAN ≤ 4'-0"	4'-0" < SPAN ≤ 6'-0"
1	X-76	A-95
2	B-336	B-540
3	B-540	C-800
4	C-800	C-1265
6	C-1265	C-1575
8	D-1575	D-2150
10	D-2150	F-2760

LARGEST PIPE DIAMETER (INCHES)	CABLE DIAMETER
1	1/8
2	1/8
3	3/16
4	1/4
* 6	3/8
* 8	3/8
* 10	3/8

DUCT SIZE (INCHES)	CABLE DIAMETER
≥30" X 30"	1/8
≥40" X 40"	1/8
≥50" X 50"	1/8
≥30" X 30"	3/16
≥60" X 60"	3/16
<60" X 60"	3/16

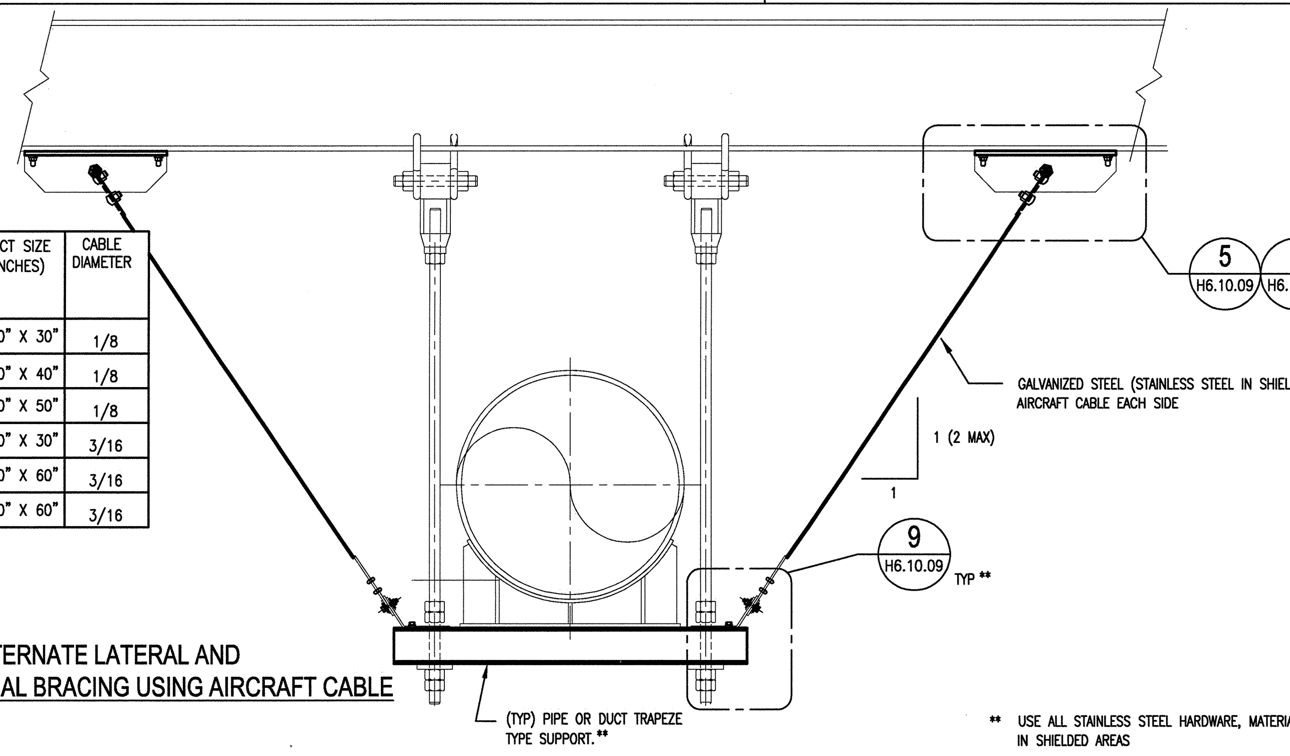

9 / H6.10.08 DETAIL - ALTERNATE LATERAL AND LONGITUDINAL BRACING USING AIRCRAFT CABLE

NO SCALE

** USE ALL STAINLESS STEEL HARDWARE, MATERIAL AND COMPONENTS IN SHIELDED AREAS

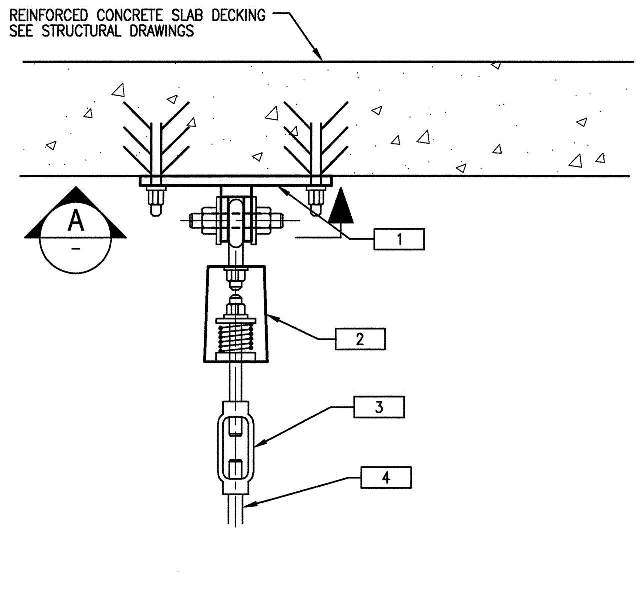

2 / ** DETAIL - ALL THREAD ROD CONNECTIONS TO STRUCTURE

NO SCALE

**H6.10.05, 06, 07, 08, 09, 13

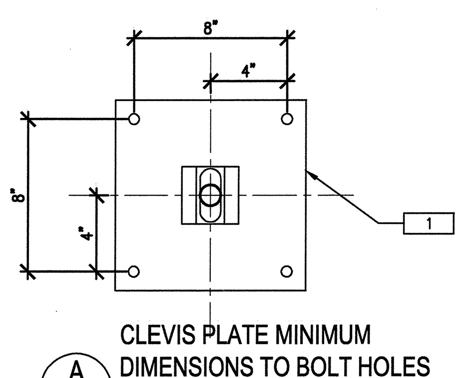

A / – CLEVIS PLATE MINIMUM DIMENSIONS TO BOLT HOLES

NO SCALE

NOTE:

THIS DETAILS SHEET IS FOR THE TARGET BUILDING ONLY.

SCALE: 1/2" = 1'-0"

NO REPRESENTATION OR WARRANTY, EXPRESSED OR IMPLIED, IS MADE AS TO THE ACCURACY, COMPLETENESS OR USEFULNESS OF THE INFORMATION OR STATEMENTS CONTAINED IN THESE DRAWINGS, OR THAT THE USE OR DISCLOSURE OF ANY INFORMATION, APPARATUS, METHOD, OR PROCESS DISCLOSED IN THESE DRAWINGS MAY NOT INFRINGE PRIVATE RIGHTS OF OTHERS. NO LIABILITY IS ASSUMED WITH RESPECT TO THE USE OF, OR FOR DAMAGES RESULTING FROM THE USE OF ANY INFORMATION, APPARATUS, METHOD, OR PROCESS DISCLOSED IN THESE DRAWINGS. DRAWINGS MADE AVAILABLE FOR INFORMATION TO BIDDER ARE NOT TO BE USED FOR OTHER PURPOSES AND ARE TO BE RETURNED UPON REQUEST OF THE FORWARDING CONTRACTOR.

SECTION AND DETAIL KEY: NUMBER OF SECTION OR DETAIL / DRAWING ON WHICH SECTION OR DETAIL IS SHOWN OR TAKEN

THIS DOCUMENT CONTROLLED BY CHANGE CONTROL SYSTEM 4

ENGINEERING PROCEDURE SNS-ENG-G001

REV	CHANGE TYPE	CHANGE CONTROL SYSTEM	CHANGE REQUEST NUMBER	DESCRIPTION	DSN	CHK	DEPT	DATE	PE	DATE	PJ	DATE	REQ	DATE	UTB	DATE	RPE	RPE NO	DATE
0				CERTIFIED FOR CONSTRUCTION – 10/26/01	MMK	BWJ			CJD	11/15/01	RAD	11/13/01			MM	11/14/01	BWJ	105869	10/26/01

REVISION OR ISSUE PURPOSE / REVISION APPROVALS

SQUAD CHECK

ST	CV	EC	EE	EM	IE	M	PD	SE	AR
REW	–	WRS	AK	WRS	BWJ	–	MP	–	ED

RPE: BRUCE W. JOHNSON, REGISTERED ENGINEER, No. 00105869, STATE OF TENNESSEE

REV. 0 DATE 10/2/01

DSN	B. JOHNSON	10/26/01
DRW	J. STEIN	10/26/01
CHK	B. JOHNSON	10/26/01
DEPT		
PE	CJ Daren	11/15/01
PJ	RA Dean	11/13/01
REQ		
UTB	M. Stevens	11/14/01

DRAWING APPROVALS

108000000-H8E-8000-A012

Knight/Jacobs Joint Venture
701 Scarboro Road, MS 8253
Oak Ridge, TN 37830
865-241-9433
fax 865-241-3400

KNIGHT
Knight Advanced Technology
1453 Mission Street
San Francisco, CA 94103

UT-BATTELLE
Oak Ridge National Laboratory
managed for the DEPARTMENT OF ENERGY under U.S. GOVERNMENT contract DE-AC05-00OR22725
UT-BATTELLE, LLC, Oak Ridge, Tennessee

PROJECT NAME:

SPALLATION NEUTRON SOURCE

STANDARD MECHANICAL DETAILS SHEET 8 OF 11

1	48	49	50	PLANT	BLDG	FL	SH.	OF	TYPE	CLASS
3	H	X	X	8	8000		1	1	S	U
51	52	53	WBS							REV
NC	NA		1.8				H6.10.08			0

AutoCAD

Date: 10/23/2001 Time: 16:14:55 Username: FUPE KGSFD_VOL2:PROJECTS\7000\700_CADD\TASK_00\740_PLOT\H6-10-08.DWG