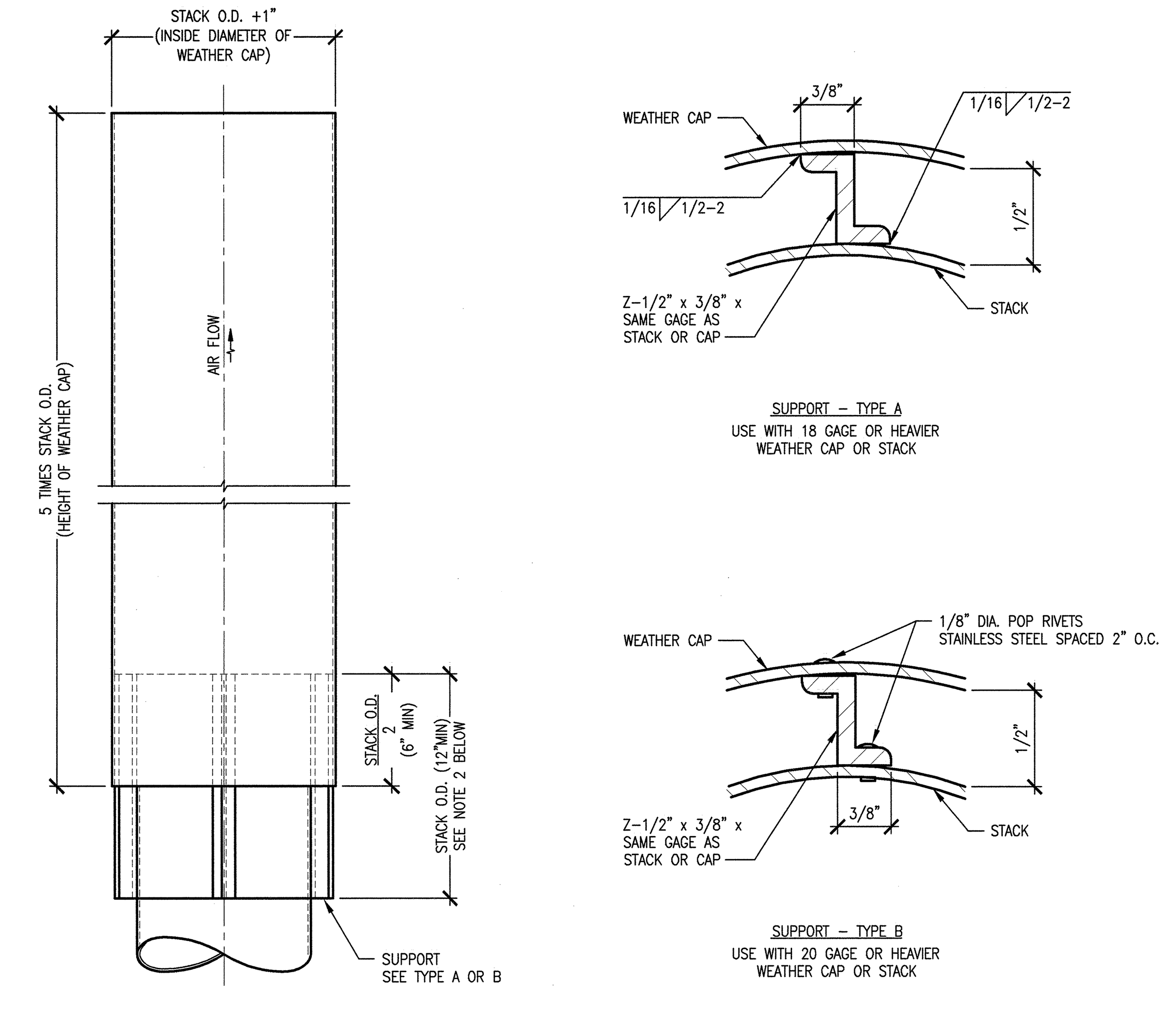

NOTES:

1. WEATHER CAP CONSTRUCTION AND MATERIAL SHALL BE THE SAME AS STACK. UNLESS OTHERWISE NOTED ON DRAWINGS.
2. FASTEN SUPPORTS TO WEATHER CA, THEN SLIP ASSEMBLY OVER STACK. FASTEN LOWER HALF OF SUPPORT TO STACK AS DETAILED ABOVE.
3. WELD PER DIVISION 18, SECTION 18100 18400.

SUPPORT SCHEDULE	
DIAMETER OF STACK – INCHES	NUMBER REQUIRED EQUALLY SPACED
4 – 12	3
13 – 16	4
17 – 24	5
25 & LARGER	SPACED 12" O.C.

15 – ROUND WEATHER CAP
NOT TO SCALE

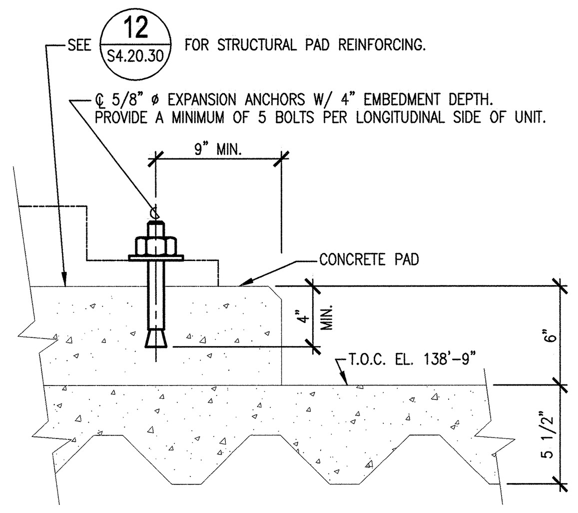

11 – AIR HANDLER UNIT TYPICAL ATTACHMENT DETAIL
NOT TO SCALE

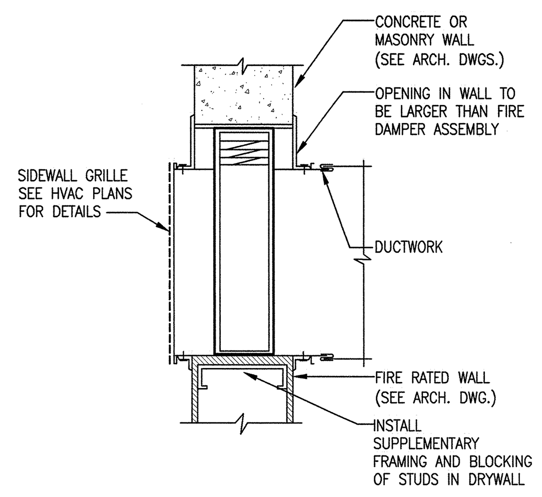

NOTE:
NOTE: DAMPERS SHALL BE INSTALLED IN ACCORDANCE WITH THE CONDITIONS OF THEIR LISTING & MANUFACTURER'S INSTALLATION INSTRUCTIONS.

8 – FIRE DAMPER DETAIL INTO STAIRWELL / THROUGH FIRE RATED WALL
NOT TO SCALE

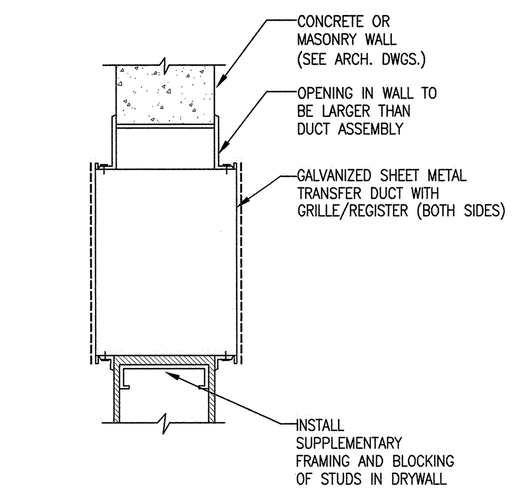

6 – TRANSFER DUCT WITHOUT FIRE DAMPER
NOT TO SCALE

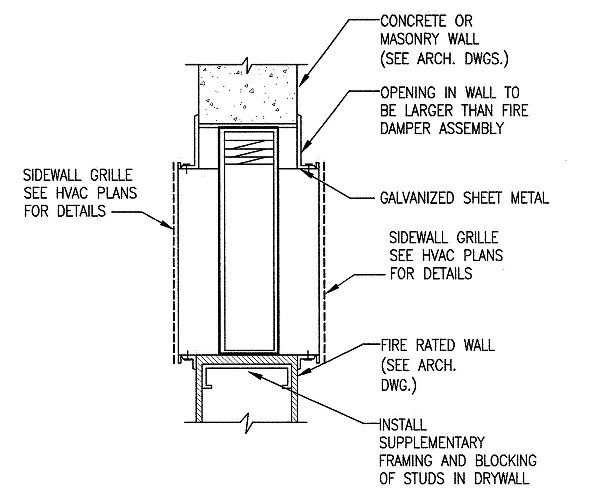

NOTE:
NOTE: DAMPERS SHALL BE INSTALLED IN ACCORDANCE WITH THE CONDITIONS OF THEIR LISTING & MANUFACTURER'S INSTALLATION INSTRUCTIONS.

4 – TRANSFER DUCT WITH FIRE DAMPER
NOT TO SCALE

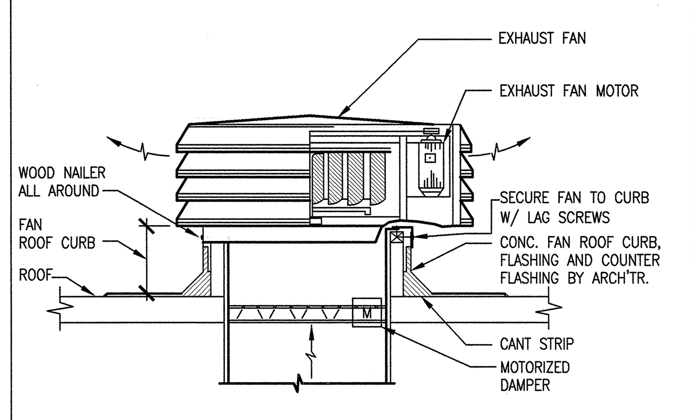

NOTE: PROVIDE VIBRATION ISOLATOR AS SPECIFIED PROVIDE NEOPRENE MOUNT (SEE SPECIFICATION)

1 – ROOF EXHAUST FAN
NOT TO SCALE

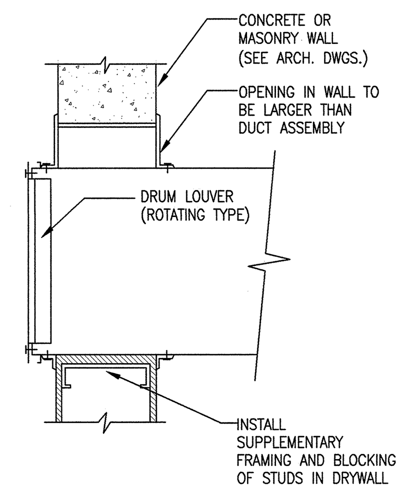

12 – MUA DUCT INTO HIGH BAY
NOT TO SCALE

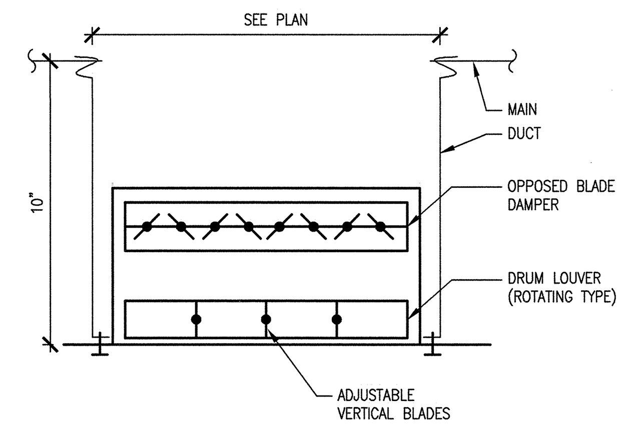

10 – DRUM LOUVER SUPPLY AIR GRILLE DETAIL (PLAN VIEW)
NOT TO SCALE

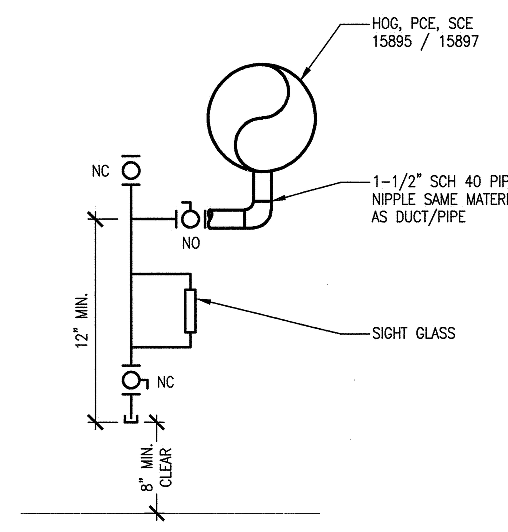

7 – DRAIN OFF PCE, HOG AND SCE
NOT TO SCALE

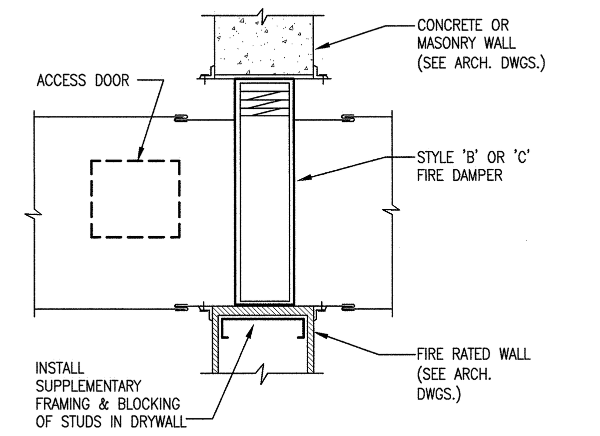

NOTE:
DAMPERS SHALL BE INSTALLED IN ACCORDANCE WITH THE CONDITIONS OF THEIR LISTING & MANUFACTURER'S INSTALLATION INSTRUCTIONS.

5 – VERTICAL FIREDAMPER-1 1/2 OR 3 HOUR
NOT TO SCALE

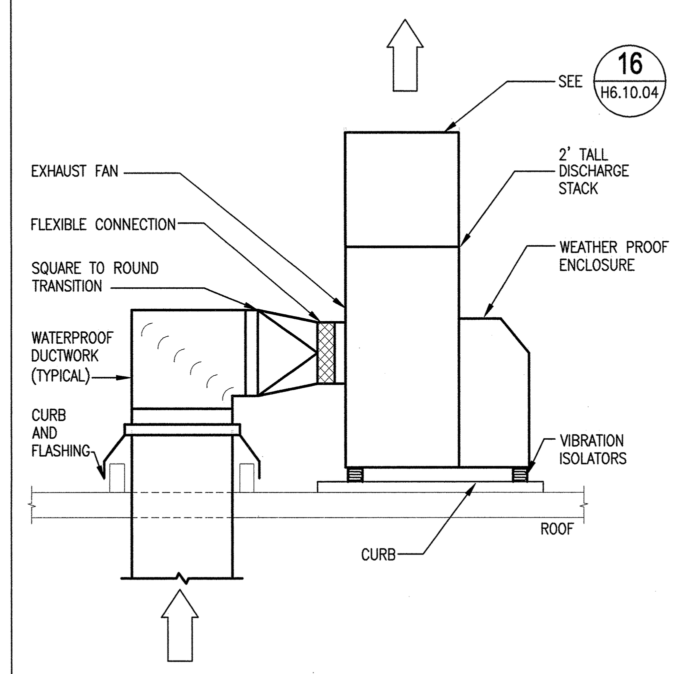

2 – EXHAUST FAN UTILITY SET
NOT TO SCALE

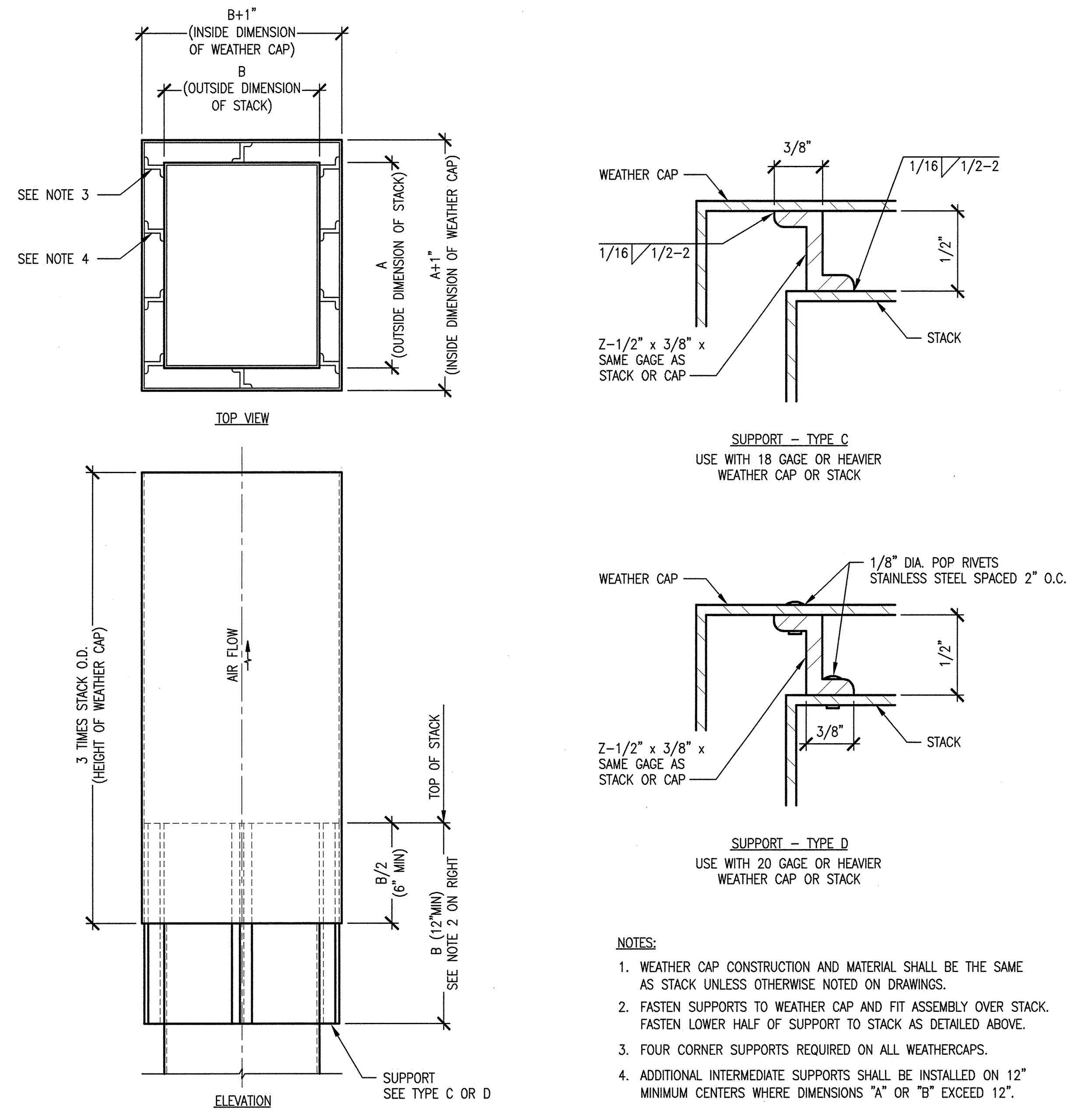

NOTES:

1. WEATHER CAP CONSTRUCTION AND MATERIAL SHALL BE THE SAME AS STACK UNLESS OTHERWISE NOTED ON DRAWINGS.
2. FASTEN SUPPORTS TO WEATHER CAP AND FIT ASSEMBLY OVER STACK. FASTEN LOWER HALF OF SUPPORT TO STACK AS DETAILED ABOVE.
3. FOUR CORNER SUPPORTS REQUIRED ON ALL WEATHERCAPS.
4. ADDITIONAL INTERMEDIATE SUPPORTS SHALL BE INSTALLED ON 12" MINIMUM CENTERS WHERE DIMENSIONS "A" OR "B" EXCEED 12".

16 – RECTANGULAR WEATHER CAP
NOT TO SCALE

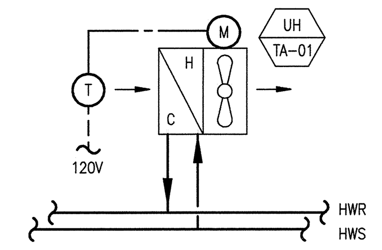

EQUIPMENT TAG #
UH-TA-01
UH-TA-02
UH-TA-03
UH-TA-04
UH-TA-05

SEQUENCE OF OPERATION:

HEATING:

SHOULD THE SPACE TEMPERATURE DROP BELOW THE THERMOSTAT SET POINT THE THERMOSTAT SHALL ACTIVATE THE UNIT HEATER FAN.

13 – UNIT HEATER CONTROL DIAGRAM
NOT TO SCALE (TYP OF 5)

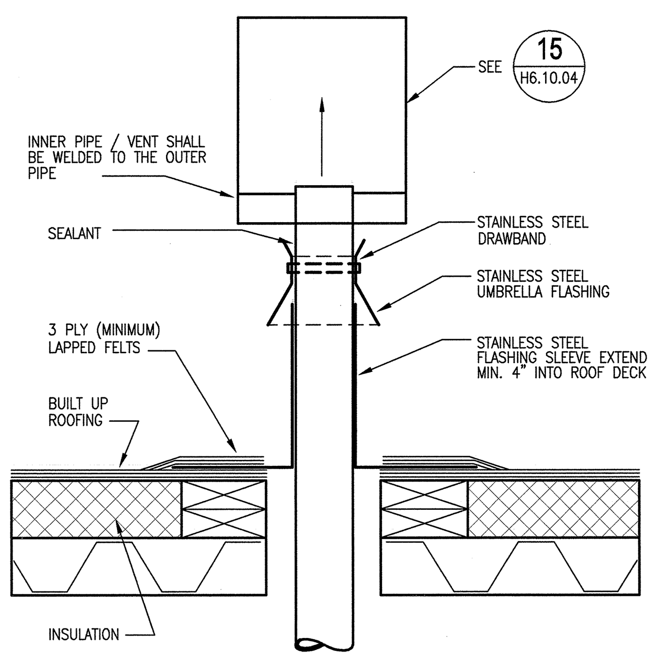

14 – PIPE/VENT ROOF PENETRATION
NOT TO SCALE

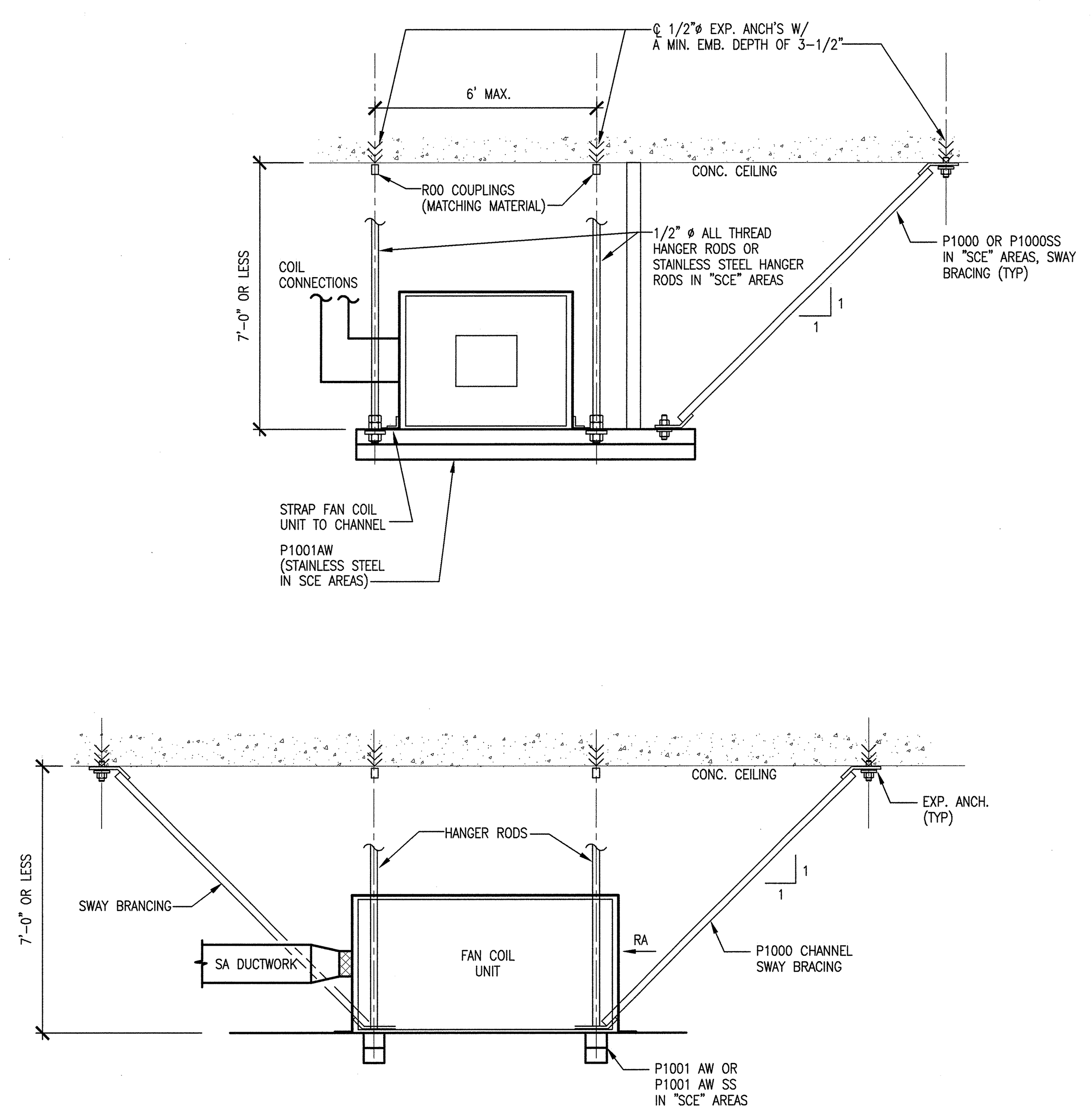

ALL SUPPORTS SHALL BE STAINLESS STEEL IN THE SCE AREAS.

NOTES:

EXPANSION ANCHORS

A. TYPICAL ANCHOR SHALL BE AN ASTM A 510 CARBON STEEL, HILTI KWIK BOLT II OR EQUIPMENT.

B. IN "SCE" AREAS USE AISC 304 STAINLESS STEEL HILTI KWIK BOLT II OR EQUIPMENT.

9 – FAN COIL UNIT SUPPORT (TARGET BASEMENT)
NOT TO SCALE

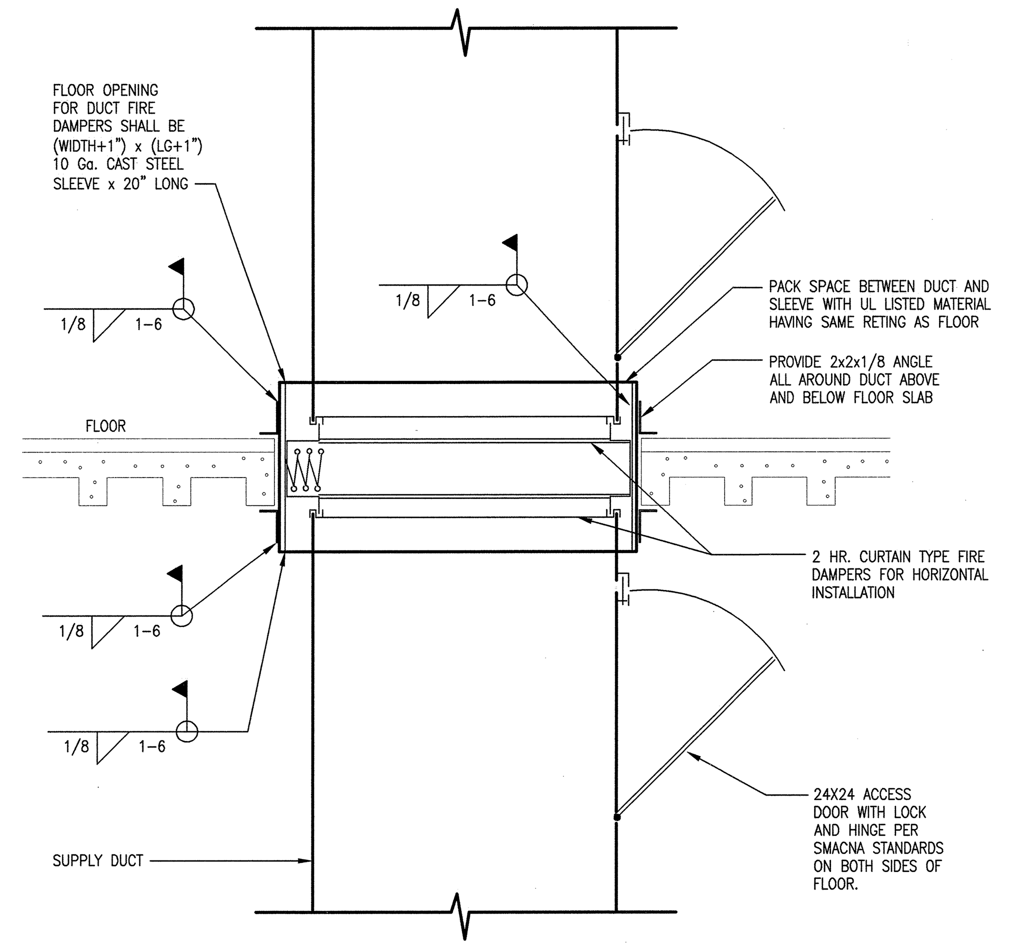

3 – HORIZONTAL FIRE DAMPER
NOT TO SCALE

NOTE: THIS DETAILS SHEET IS FOR THE TARGET BUILDING ONLY.

NO REPRESENTATION OR WARRANTY, EXPRESSED OR IMPLIED, IS MADE AS TO THE ACCURACY, COMPLETENESS OR USEFULNESS OF THE INFORMATION OR STATEMENTS CONTAINED IN THESE DRAWINGS, OR THAT THE USE OR DISCLOSURE OF ANY INFORMATION, APPARATUS, METHOD, OR PROCESS DISCLOSED IN THESE DRAWINGS MAY NOT INFRINGE PRIVATE RIGHTS OF OTHERS. NO LIABILITY IS ASSUMED WITH RESPECT TO THE USE OF, OR FOR DAMAGES RESULTING FROM THE USE OF ANY INFORMATION, APPARATUS, METHOD, OR PROCESS DISCLOSED IN THESE DRAWINGS. DRAWINGS MADE AVAILABLE FOR INFORMATION TO BIDDER ARE NOT TO BE USED FOR OTHER PURPOSES AND ARE TO BE RETURNED UPON REQUEST OF THE FORWARDING CONTRACTOR.

SECTION AND DETAIL KEY: NUMBER OF SECTION OR DETAIL / DRAWING ON WHICH SECTION OR DETAIL IS SHOWN OR TAKEN

THIS DOCUMENT CONTROLLED BY
CHANGE CONTROL SYSTEM 4
ENGINEERING PROCEDURE SNS-ENG-G001

REV	CHANGE TYPE	CHANGE CONTROL SYSTEM	CHANGE REQUEST NUMBER	DESCRIPTION	DSN	CHK	DEPT	DATE	PE	DATE	PJ	DATE	REQ	DATE	UTB	DATE	RPE	RPE NO	DATE
0				CERTIFIED FOR CONSTRUCTION – 11/13/01	MMK	BWJ			[signature]	11/15/01	RAD	11/14/01			[signature]	11/14/01	BWJ	105869	11/13/01

REVISION OR ISSUE PURPOSE / REVISION APPROVALS

ST	CV	EC	EE	EM	IE	M	PD	SE	AR
REW	–	WRS	AK	WRS	BWJ	–	MP	–	ED

SQUAD CHECK

RPE: BRUCE W. JOHNSON, REGISTERED ENGINEER, AGRICULTURE, COMMERCE, No. 00105869, STATE OF TENNESSEE

DSN	B. JOHNSON	11/13/01
DRW	J. STEIN	11/13/01
CHK	B. JOHNSON	11/13/01
DEPT		
PE	[signature]	11/15/01
PJ	[signature]	11/14/01
REQ		
UTB	[signature]	11/14/01

REV. 0 DATE 11/13/01
DRAWING APPROVALS

108000000-H8E-8000-A007

Knight/Jacobs Joint Venture
701 Scarboro Road, MS 8253
Oak Ridge, TN 37830
865-241-9433
fax 865-241-3400

KNIGHT
Knight Advanced Technology
1453 Mission Street
San Francisco, CA 94103

UT-BATTELLE
Oak Ridge National Laboratory
managed for the DEPARTMENT OF ENERGY under U.S. GOVERNMENT contract DE-AC05-00OR22725
UT-BATTELLE, LLC, Oak Ridge, Tennessee

PROJECT NAME:
SPALLATION NEUTRON SOURCE

STANDARD MECHANICAL DETAILS SHEET 4 OF 11

1	48	49	50	PLANT	BLDG	FL	SH.	OF	TYPE	CLASS
3	H	X	X	8	8000		1	1	S	U
51	52			53	WBS					REV
NC	NA				1.8		H6.10.04			0

Date: 11/13/2001 Time: 10:55:47
Username: THAWM
KGSFO_VOL2:PROJECTS\7000\700_CADD\TASK_00\740_PLOT\H6-10-04.DWG