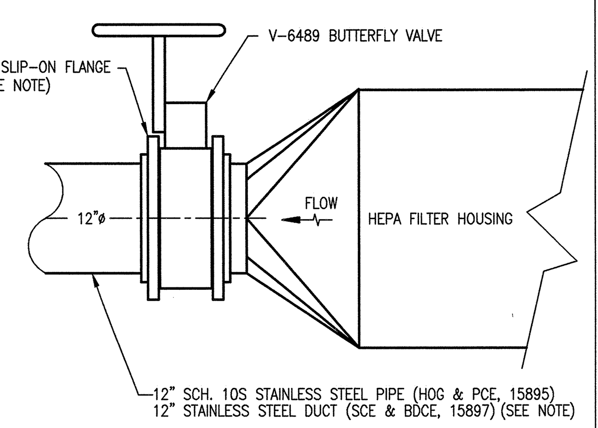

NOTE: MODIFY 12" 150# SLIP-ON FLANGE AS REQUIRED TO FIT DUCT.

7 FILTER HOUSING/ EXHAUST DUCT CONNECTION

NOT TO SCALE

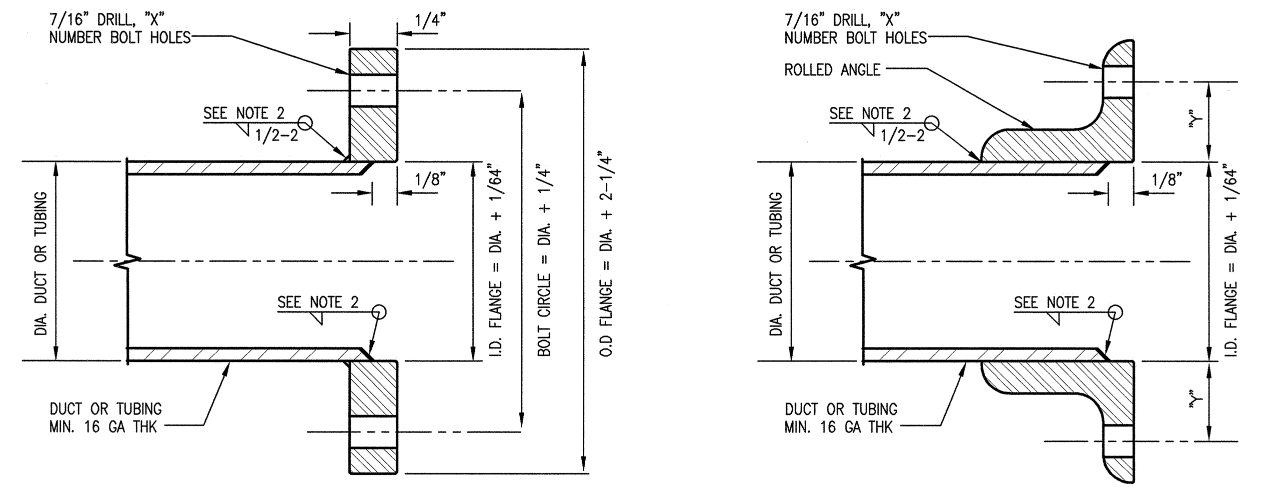

NOTES:

1. WELD PER DIVISION 18, SECTIONS 18100 AND 18400.
2. DUCTWORK THICKNESS GREATER THAN 1/8", FILLET WELD SHALL BE 1/8" MINIMUM. DUCTWORK THICKNESS 1/8" OR LESS, FILLET WELD SHALL BE SAME THICKNESS AS DUCT.
3. BOLTS SHALL BE THE SAME MATERIAL AS DUCT. EXCEPT ALUMINUM DUCT SHALL HAVE STEEL BOLTS. BOLTS SHALL BE 3/8"-16NCx1-1/2" LONG WITH NUTS.
4. FLANGES SHALL BE THE SAME MATERIAL AS DUCT OR TUBING SYSTEM. FLANGES SHALL BE MACHINE CUT. USE OF CUTTING TORCH FOR FABRICATION WILL NOT BE ALLOWED.
5. FLANGE FACES SHALL BE FLAT AND PARALLEL WITHIN 1/32".

PLATE FLANGE SCHEDULE

DUCT OR TUBING DIAMETER	"X" – NUMBER BOLT HOLES
1" THRU 3"	4
4" THRU 6"	6
7" THRU 8"	8
9" THRU 14"	12

ANGLE FLANGE SCHEDULE

DUCT DIAMETER	"X" – NO. BOLT HOLES	ANGLE SIZE	"Y"
15" THRU 17"	12	1 1/4"x1 1/4"x1/8"	3/4"
18"	12	1 1/2"x1 1/2"x3/16"	7/8"
19" THRU 24"	16	1 1/2"x1 1/2"x3/16"	7/8"
25" THRU 27"	20	1 1/2"x1 1/2"x3/16"	7/8"
28" THRU 30"	20	2"x2"x1/4"	1 1/8"
31" THRU 36"	24	2"x2"x1/4"	1 1/8"
37" THRU 46"	30	2"x2"x1/4"	1 1/8"
47" THRU 56"	36	2"x2"x1/4"	1 1/8"
57" THRU 60"	40	2"x2"x1/4"	1 1/8"

4 WELDED COMPANION FLANGE

NOT TO SCALE

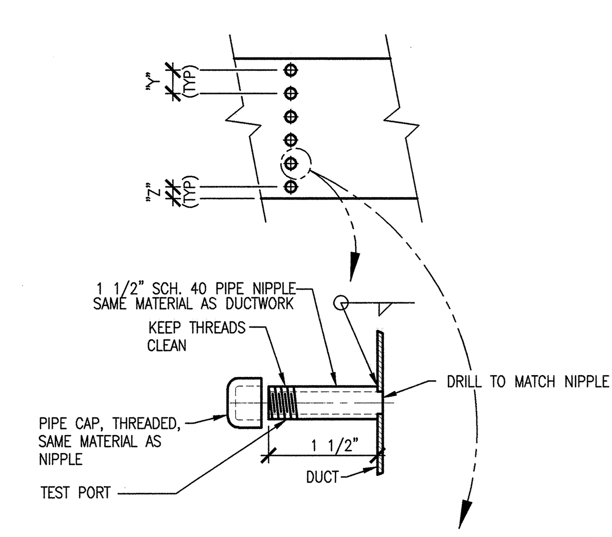

TEST OPENING SPACING

DUCT DIMENSION "X"	TEST OPENINGS REQUIRED	"Z"	"Y"	NO. OF "Y" SPACES
0 THRU 7	1	"X"/2	0	0
8 THRU 11	2	"X"/4	"X"/2	1
12 THRU 17	3	"X"/6	"X"/3	2
18 THRU 23	4	"X"/8	"X"/4	3
24 THRU 35	6	"X"/12	"X"/6	5
36 THRU 47	8	"X"/16	"X"/8	7
48 THRU 59	10	"X"/20	"X"/10	9
60 AND OVER	12	"X"/24	"X"/12	11

RECTANGULAR DUCT

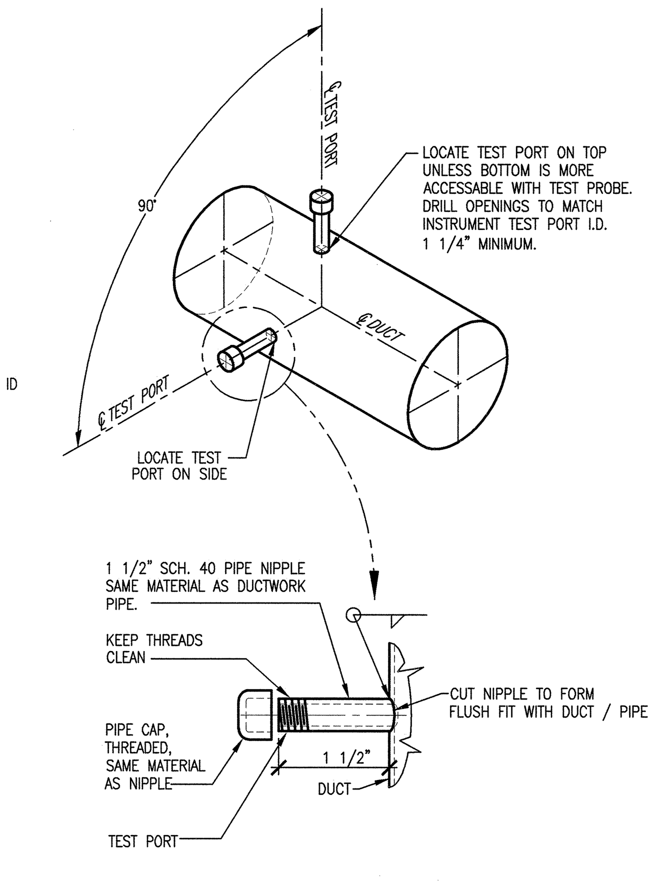

CIRCULAR DUCT

2 HVAC TEST PORT DETAIL (15897 / 15895)

NOT TO SCALE

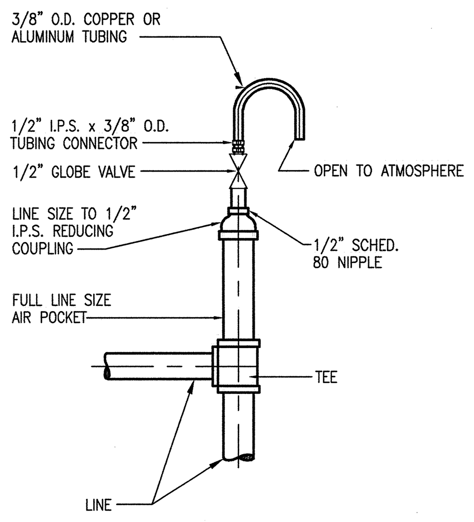

1 MANUAL AIR VENT

NOT TO SCALE

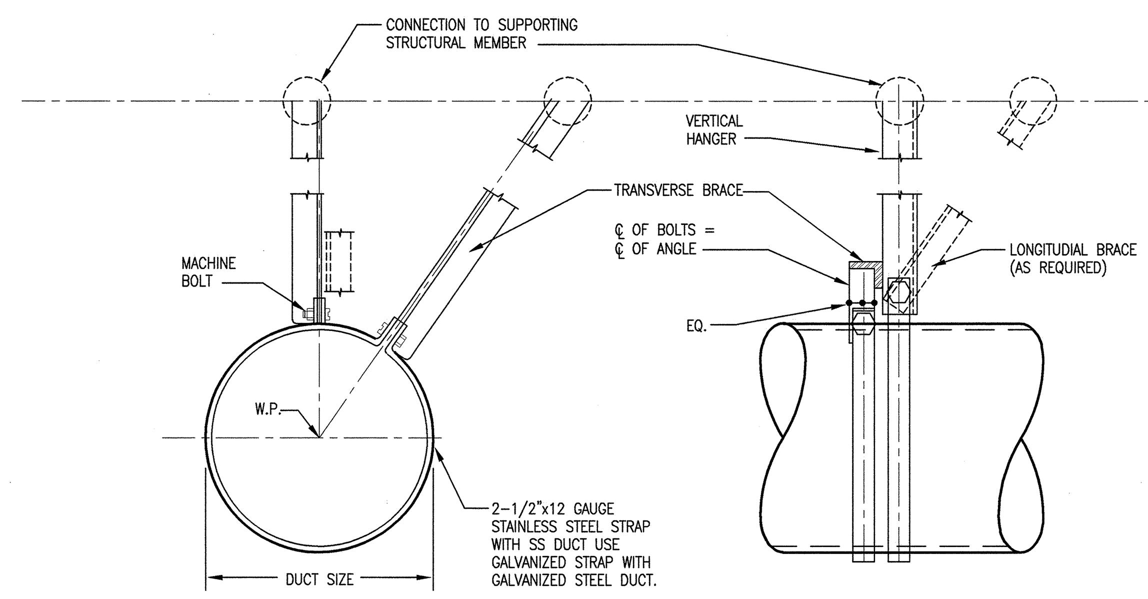

5 SINGLE HANGER BRACING FOR ROUND DUCTS (ALL SIZES)

NOT TO SCALE

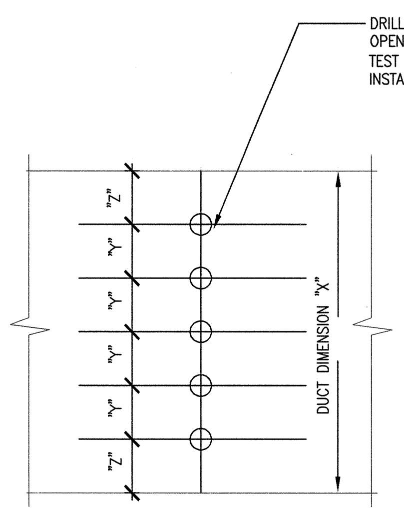

TEST OPENING SPACING

DUCT DIMENSION "X"	TEST OPENINGS REQUIRED	"Z"	"Y"	NO. OF "Y" SPACES
0 THRU 7	1	"X"/2	0	0
8 THRU 11	2	"X"/4	"X"/2	1
12 THRU 17	3	"X"/6	"X"/3	2
18 THRU 23	4	"X"/8	"X"/4	3
24 THRU 35	6	"X"/12	"X"/6	5
36 THRU 47	8	"X"/16	"X"/8	7
48 THRU 59	10	"X"/20	"X"/10	9
60 AND OVER	12	"X"/24	"X"/12	11

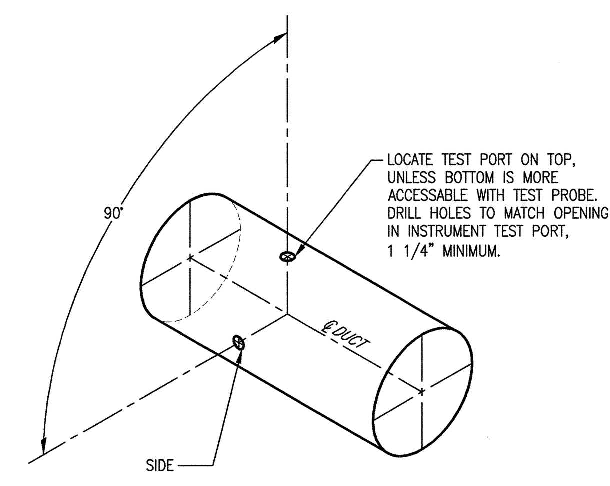

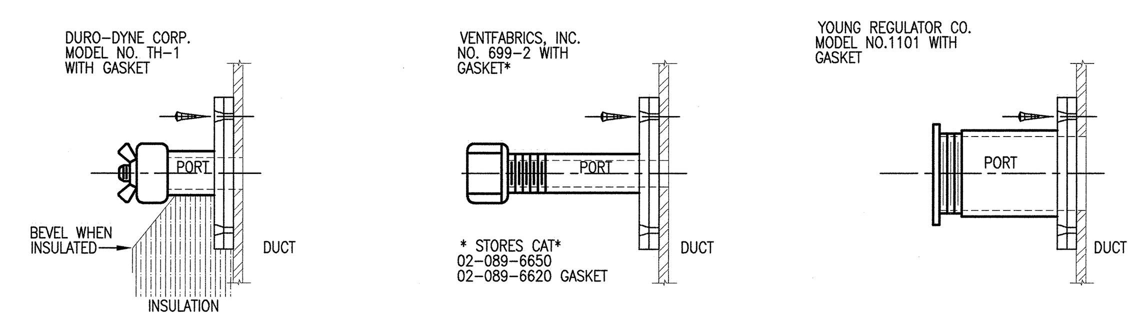

RECTANGULAR DUCT

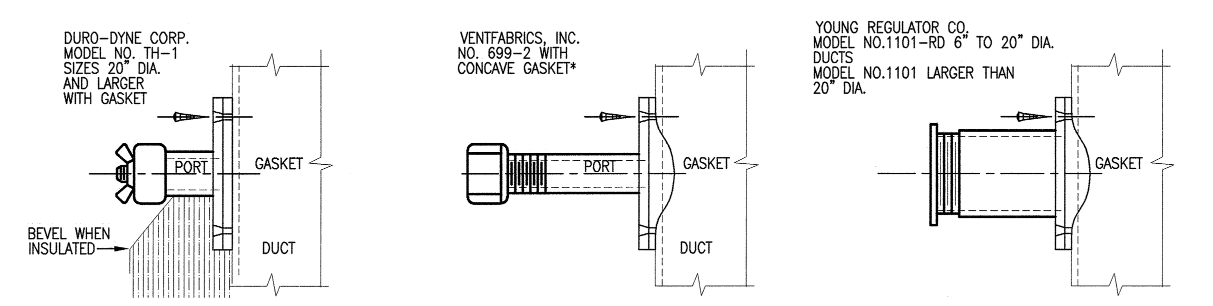

CIRCULAR DUCT

3 HVAC TEST PORT DETAIL (15891)

NOT TO SCALE

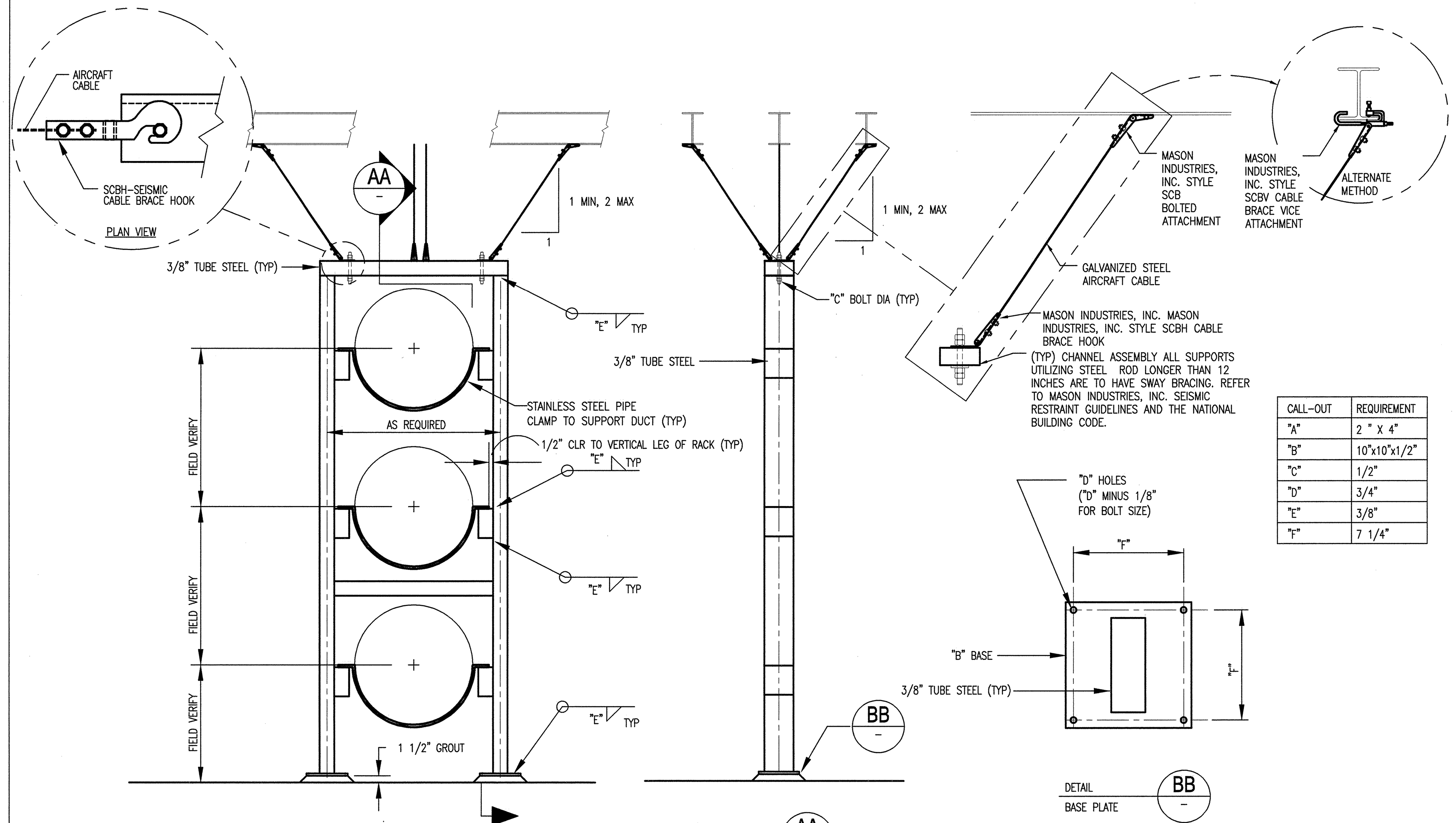

CALL-OUT	REQUIREMENT
"A"	2 " X 4"
"B"	10"x10"x1/2"
"C"	1/2"
"D"	3/4"
"E"	3/8"
"F"	7 1/4"

CONTRACTOR RESPONSIBLE FOR PROVIDING SUITABLE ANCHOR BOLTS BASED ON "D".

8 DUCT SUPPORT AT FB-INJ-01

NOT TO SCALE

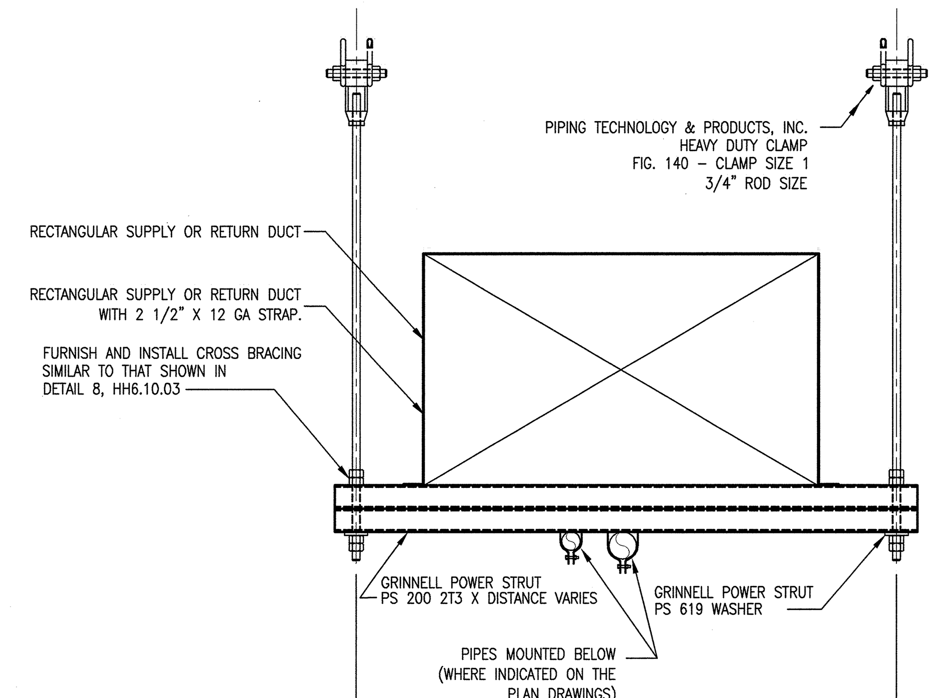

6 RECTANGULAR DUCT SUPPORT

NOT TO SCALE

NOTE:

THIS DETAILS SHEET IS COMMON TO THE TARGET BUILDING AND THE RING INJECTION DUMP.

AutoCAD

NO REPRESENTATION OR WARRANTY, EXPRESSED OR IMPLIED, IS MADE AS TO THE ACCURACY, COMPLETENESS OR USEFULNESS OF THE INFORMATION OR STATEMENTS CONTAINED IN THESE DRAWINGS, OR THAT THE USE OR DISCLOSURE OF ANY INFORMATION, APPARATUS, METHOD, OR PROCESS DISCLOSED IN THESE DRAWINGS MAY NOT INFRINGE PRIVATE RIGHTS OF OTHERS. NO LIABILITY IS ASSUMED WITH RESPECT TO THE USE OF, OR FOR DAMAGES RESULTING FROM THE USE OF ANY INFORMATION, APPARATUS, METHOD, OR PROCESS DISCLOSED IN THESE DRAWINGS. DRAWINGS MADE AVAILABLE FOR INFORMATION TO BIDDER ARE NOT TO BE USED FOR OTHER PURPOSES AND ARE TO BE RETURNED UPON REQUEST OF THE FORWARDING CONTRACTOR.

SECTION AND DETAIL KEY: NUMBER OF SECTION OR DETAIL / DRAWING ON WHICH SECTION OR DETAIL IS SHOWN OR TAKEN

THIS DOCUMENT CONTROLLED BY

CHANGE CONTROL SYSTEM 4

ENGINEERING PROCEDURE SNS-ENG-G001

REV	CHANGE TYPE	CHANGE CONTROL SYSTEM	CHANGE REQUEST NUMBER	DESCRIPTION	DSN	CHK	DEPT	DATE	PE	DATE	PJ	DATE	REQ	DATE	UTB	DATE	RPE	RPE NO	DATE	ST	CV	EC	EE	EM	IE	M	PD	SE	AR
1				TARGET – CERTIFIED FOR CONSTRUCTION – 11/13/01	MMK	BWJ			(signature)	11/15/01	RAD	11/14/01			(signature)	11/14/01	BWJ	105869	11/13/01	REW	–	WRS	AK	WRS	BWJ	–	MP	–	ED
0				RING INJ. DUMP – CERTIFIED FOR CONSTRUCTION – 8/3/01	MMK	BWJ			CG	8/9/01	RAD	8/6/01			JRL	8/7/01	BWJ	105869	8/3/01	REW	–	WRS	RL	WRS	BWJ	–	RM	–	WAS

REVISION OR ISSUE PURPOSE | REVISION APPROVALS | SQUAD CHECK

RPE: (seal) BRUCE W. JOHNSON, REGISTERED ENGINEER, No. 00105869, STATE OF TENNESSEE — REV. 1, DATE 11/13/01

DSN	B. JOHNSON	11/13/01
DRW	J. STEIN	11/13/01
CHK	B. JOHNSON	11/13/01
DEPT		
PE	(signature)	11/15/01
PJ	(signature)	11/14/01
REQ		
UTB	(signature)	11/14/01

DRAWING APPROVALS

108000000-H8E-8000-A004

Knight/Jacobs Joint Venture
701 Scarboro Road, MS 8253
Oak Ridge, TN 37830
865-241-9433
fax 865-241-3400

KNIGHT
Knight Advanced Technology
1453 Mission Street
San Francisco, CA 94103

UT-BATTELLE
Oak Ridge National Laboratory
managed for the DEPARTMENT OF ENERGY under U.S. GOVERNMENT contract DE-AC05-00OR22725
UT-BATTELLE, LLC, © Oak Ridge, Tennessee

PROJECT NAME: SPALLATION NEUTRON SOURCE

STANDARD MECHANICAL DETAILS SHEET 3 OF 11

1	48	49	50	PLANT	BLDG	FL	SH.	OF	TYPE	CLASS
3	H	X	X	8	8000		1	1	S	U
51	52		53		WBS					REV
NC	NA				1.8		H6.10.03			1