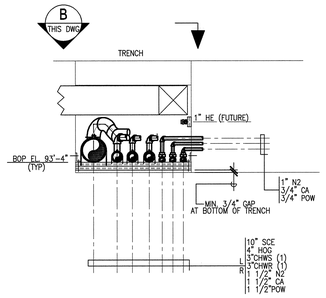

1 MAIN TRENCH SECTION
SCALE: 1/2" = 1'-0"

H2.01.41 P2.01.41
H2.01.43 P2.01.43
H2.01.44 P2.01.44
H2.01.46 P2.01.46

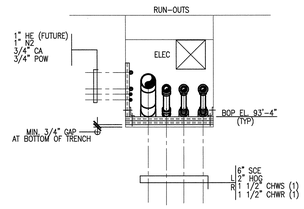

2 TRENCH SECTION
SCALE: 1/2" = 1'-0"

H2.01.43 P2.01.43
H2.01.46 P2.01.46

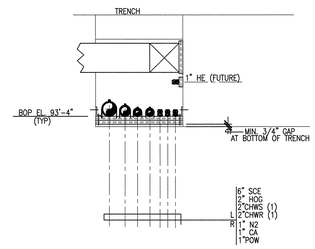

3 MAIN TRENCH SECTION
SCALE: 1/2" = 1'-0"

H2.01.41 P2.01.41
H2.01.43 P2.01.43

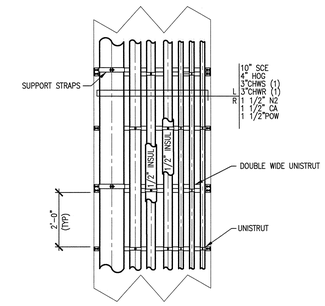

B THIS DWG MAIN TRENCH PLAN DETAIL
SCALE: 1/2" = 1'-0"

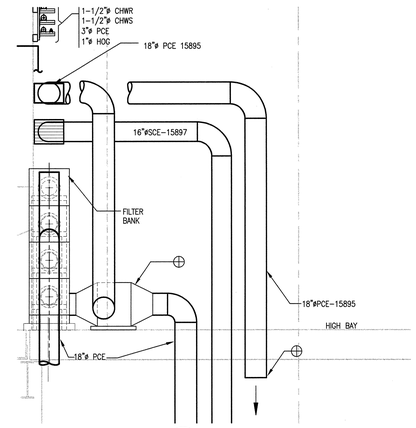

4 H2.03.45 HIGH BAY-AIR LOCK
SCALE: 1/4" = 1'-0"

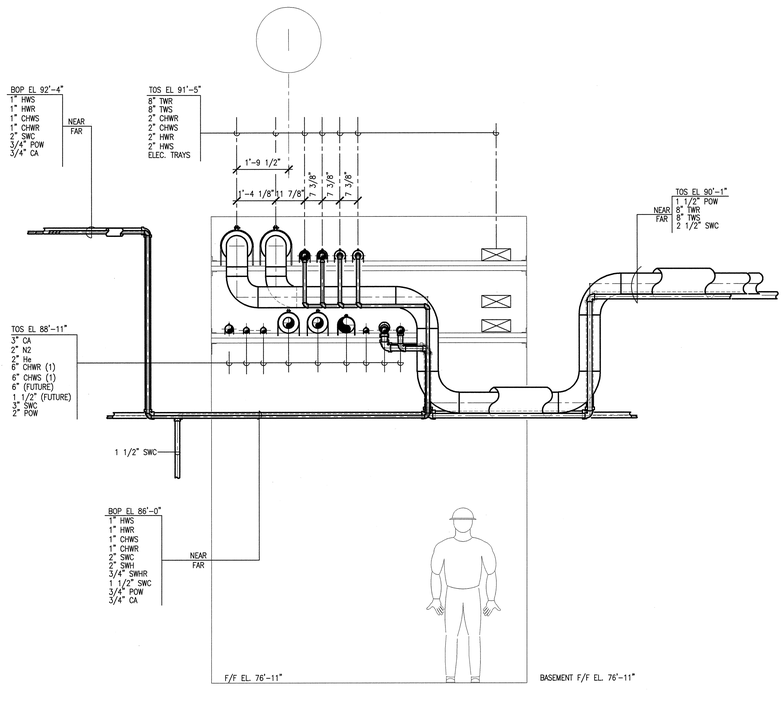

5 H3.B1.44 SECTION
SCALE: 1/2"=1'-0"

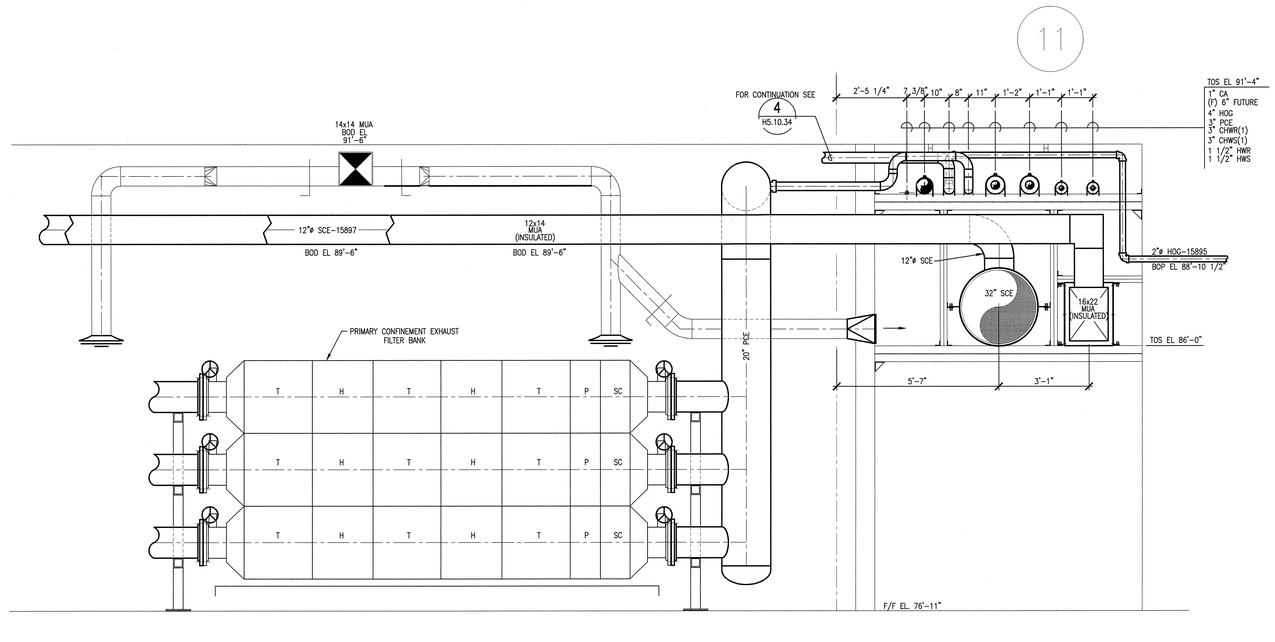

6 H2.B1.46 PCE FILTERS IN BASEMENT (SECTION VIEW LOOKING NORTH)
SCALE: 1/2"=1'-0"

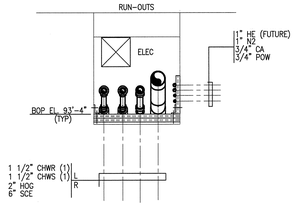

7 TRENCH SECTION
SCALE: 1/2" = 1'-0"

2' 1' 0 2' 4'
SCALE: 1/2" = 1'-0"

4' 2' 0 4' 8'
SCALE: 1/4" = 1'-0"

NO REPRESENTATION OR WARRANTY, EXPRESSED OR IMPLIED, IS MADE AS TO THE ACCURACY, COMPLETENESS OR USEFULNESS OF THE INFORMATION OR STATEMENTS CONTAINED IN THESE DRAWINGS, OR THAT THE USE OR DISCLOSURE OF ANY INFORMATION, APPARATUS, METHOD, OR PROCESS DISCLOSED IN THESE DRAWINGS MAY NOT INFRINGE PRIVATE RIGHTS OF OTHERS. NO LIABILITY IS ASSUMED WITH RESPECT TO THE USE OF, OR FOR DAMAGES RESULTING FROM THE USE OF ANY INFORMATION, APPARATUS, METHOD, OR PROCESS DISCLOSED IN THESE DRAWINGS. DRAWINGS MADE AVAILABLE FOR INFORMATION TO BIDDER ARE NOT TO BE USED FOR OTHER PURPOSES AND ARE TO BE RETURNED UPON REQUEST OF THE FORWARDING CONTRACTOR.

NUMBER OF SECTION OR DETAIL
DRAWING ON WHICH SECTION OR DETAIL IS SHOWN OR TAKEN
SECTION AND DETAIL KEY

THIS DOCUMENT CONTROLLED BY
CHANGE CONTROL SYSTEM 3
ENGINEERING PROCEDURE SNS-ENG-G001

REV	CHANGE TYPE	CHANGE CONTROL SYSTEM	CHANGE REQUEST NUMBER	DESCRIPTION	DSN	CHK	DEPT	DATE	PE	DATE	PJ	DATE	REQ	DATE	UTB	DATE	RPE	RPE NO	DATE	ST	CV	EC	EE	EM	IE	M	PD	SE	AR
0				CERTIFIED FOR CONSTRUCTION – 10/26/01	MMK	BWJ		RBD 11/15/01		RAD 11/16/01						11/16/01	BWJ	105869	10/26/01	REW	–	WRS	AK	WRS	BWJ	–	MP	–	ED

REVISION OR ISSUE PURPOSE — REVISION APPROVALS — SQUAD CHECK

RPE
BRUCE W. JOHNSON REGISTERED ENGINEER No. 0010558 STATE OF TENNESSEE
0 REV. 10/26/01 DATE

DSN	M.KEHOE	10/26/01
DRW	J.STEIN	10/26/01
CHK	B.JOHNSON	10/26/01
DEPT		
PE		11/15/01
PJ	R A Dean	11/15/01
REQ		
UTB		11/16/01

DRAWING APPROVALS

108030700-H8E-8700-A099

Knight/Jacobs
Knight/Jacobs Joint Venture
701 Scarboro Road, MS 8253
Oak Ridge, TN 37830
865-241-9433
fax 865-241-3400

KNIGHT
Knight Advanced Technology
548 West Randolph Street
Chicago, IL 60661

UT-BATTELLE
Oak Ridge National Laboratory
managed for the DEPARTMENT OF ENERGY under
U.S. GOVERNMENT contract DE-AC05-00OR22725
UT-BATTELLE, LLC. © Oak Ridge, Tennessee

PROJECT NAME:
SPALLATION NEUTRON SOURCE

TARGET BUILDING
SECTIONS

1	48	49	50	PLANT	BLDG	FL	SH.	OF	TYPE	CLASS
3	H	X	X	8	8700		1	1	S	U
51		52		53						REV
NC		NA			WRS 1.8.3.7		H5.10.37			0

Date: 10/24/2001 Time: 13:18:20