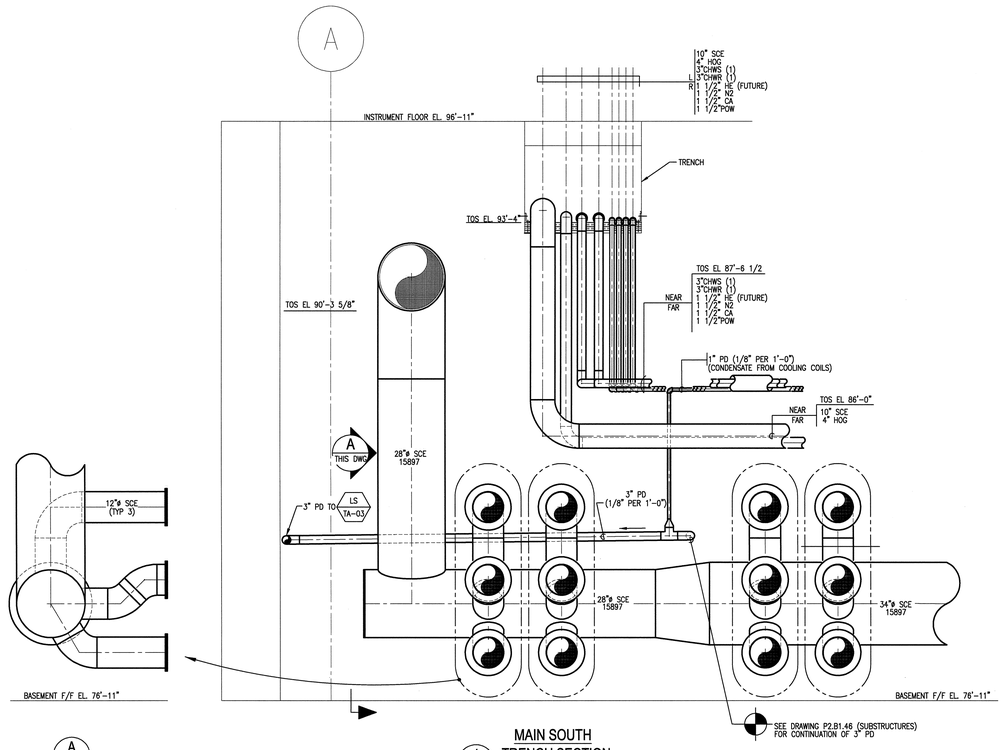

1 MAIN SOUTH TRENCH SECTION
SCALE: 1/2" = 1'-0"
H2.B1.46
H3.B1.46
P3.B1.46

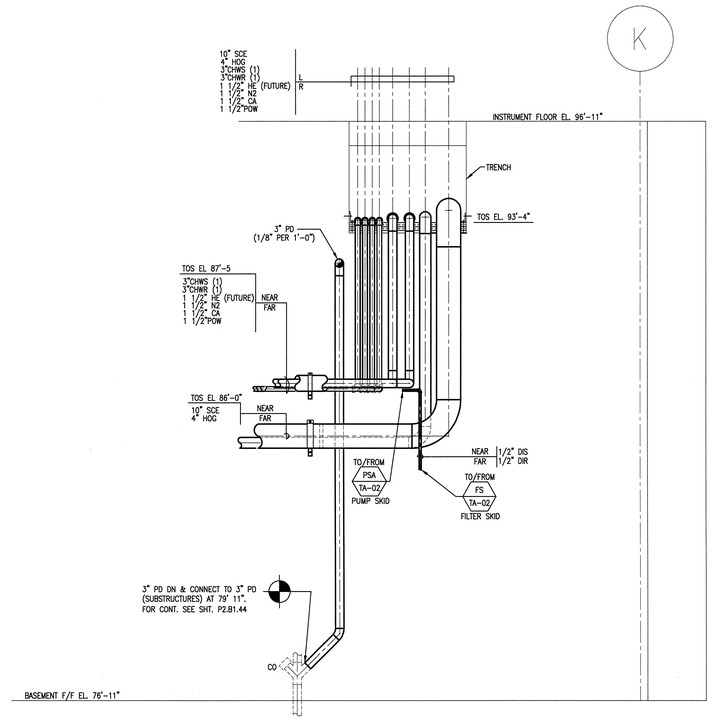

2 MAIN NORTH TRENCH SECTION
SCALE: 1/2" = 1'-0"
H2.B1.44
H3.B1.44
P3.B1.44

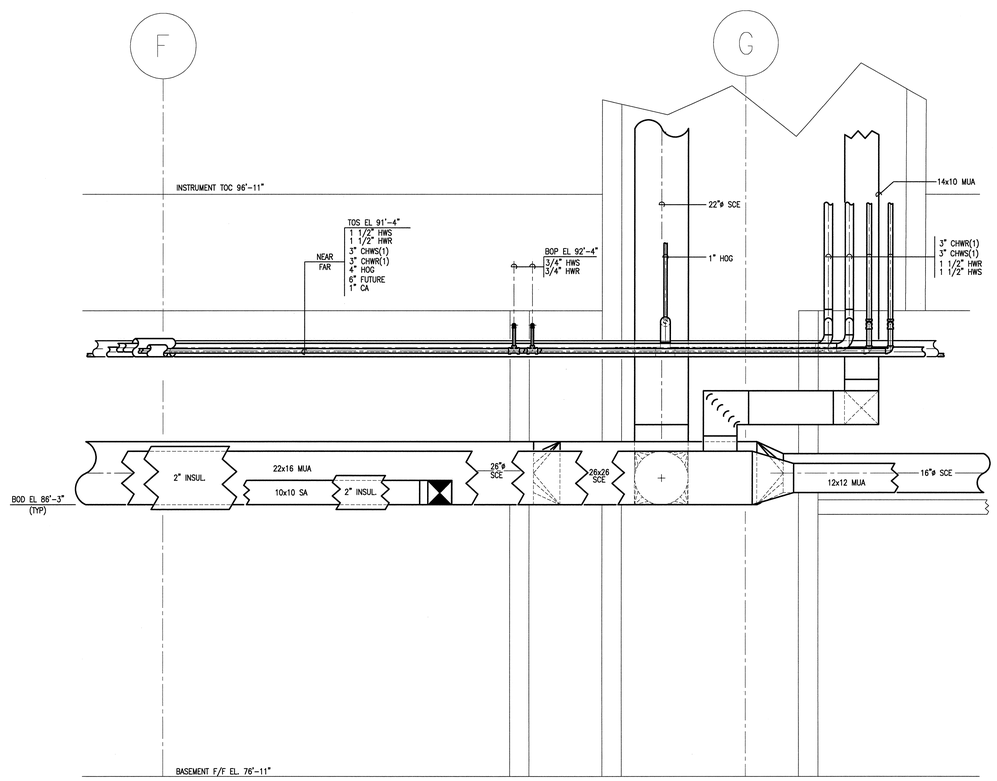

3 CENTRAL UTILITY SHAFT
SCALE: 1/2" = 1'-0"
H2.B1.46

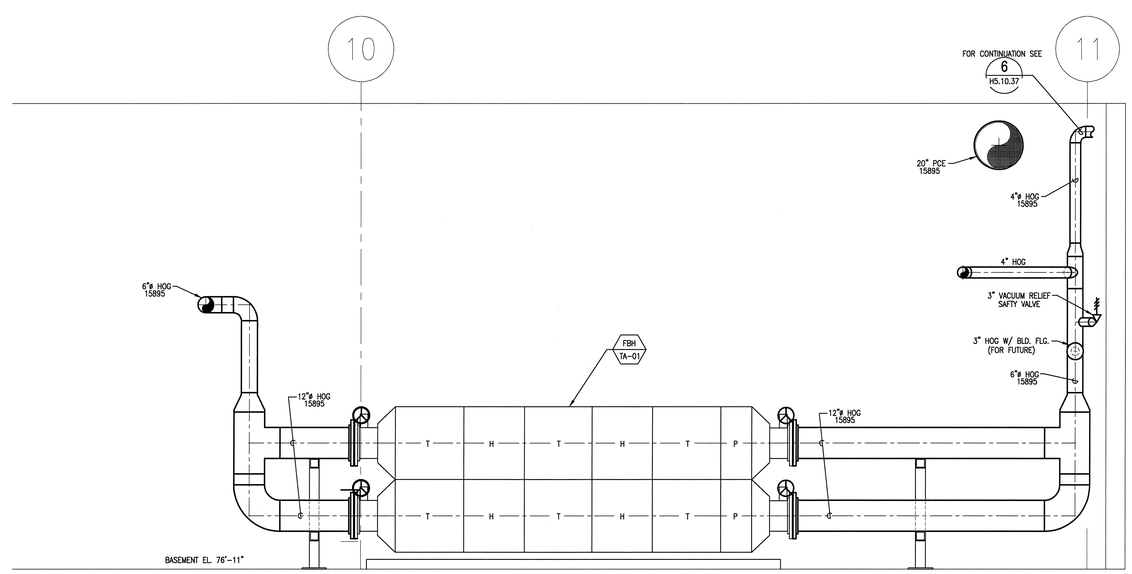

4 HOG FILTERS IN BASEMENT (SECTION VIEW LOOKING NORTH)
SCALE: 1/2"=1'-0"
H2.B1.46

2' 1' 0 2' 4'
SCALE: 1/2" = 1'-0"

108030700-H8E-8700-A082

Knight Jacobs
Knight/Jacobs Joint Venture
701 Scarboro Road, MS 8253
Oak Ridge, TN 37830
865-241-9433
fax 865-241-3400

KNIGHT
Knight Advanced Technology
540 West Randolph Street
Chicago, IL 60661

UT-BATTELLE
Oak Ridge National Laboratory
managed for the DEPARTMENT OF ENERGY under
U.S. GOVERNMENT contract DE-AC05-00OR22725
UT-BATTELLE, LLC, ® Oak Ridge, Tennessee.

PROJECT NAME:
SPALLATION NEUTRON SOURCE

TARGET BUILDING SECTIONS

1	48	49	50	PLANT	BLDG	FL	SH.	OF	TYPE	CLASS
3	H	X	X	8	8700		1	1	S	U
51		52		53	WBS					REV
NC		NA			1.8.3.7		H5.10.34			0

RPE	DSN	M.KEHOE	10/26/01
	DRW	J.STEN	10/26/01
	CHK	B.JOHNSON	10/26/01
	DEPT		
	PE		11/2/01
	PJ	R.O.Beem	11/2/01
	REQ		
0 REV.	10/26/01 DATE	UTB	11/6/01

DRAWING APPROVALS

REV	CHANGE FOR	CHANGE CONTROL SYSTEM	CHANGE REQUEST NUMBER	DESCRIPTION	DSN	CHK	DEPT
0				CERTIFIED FOR CONSTRUCTION – 10/26/01	MMK	BWJ	

REVISION OR ISSUE PURPOSE

DATE	PE	DATE	PJ	DATE	REQ	DATE	UTB	DATE	RPE	RPE NO	DATE
	11/2/01	11/2/01	RPD	11/2/01				11/6/01	BWJ	105869	10/26/01

REVISION APPROVALS

ST	CV	EC	EE	EM	IE	M	PD	SE	AR
REW	–	WRS	AK	WRS	BWJ	–	MP	–	ED

SQUAD CHECK

NO REPRESENTATION OR WARRANTY, EXPRESSED OR IMPLIED, IS MADE AS TO THE ACCURACY, COMPLETENESS OR USEFULNESS OF THE INFORMATION OR STATEMENTS CONTAINED IN THESE DRAWINGS, OR THAT THE USE OR DISCLOSURE OF ANY INFORMATION, APPARATUS, METHOD, OR PROCESS DISCLOSED IN THESE DRAWINGS MAY NOT INFRINGE PRIVATE RIGHTS OF OTHERS. NO LIABILITY IS ASSUMED WITH RESPECT TO THE USE OF, OR FOR DAMAGES RESULTING FROM THE USE OF ANY INFORMATION, APPARATUS, METHOD, OR PROCESS DISCLOSED IN THESE DRAWINGS. DRAWINGS MADE AVAILABLE FOR INFORMATION TO BIDDER ARE NOT TO BE USED FOR OTHER PURPOSES AND ARE TO BE RETURNED UPON REQUEST OF THE FORWARDING CONTRACTOR.

NUMBER OF SECTION OR DETAIL
DRAWING ON WHICH SECTION OR DETAIL IS SHOWN OR TAKEN
SECTION AND DETAIL KEY

THIS DOCUMENT CONTROLLED BY
CHANGE CONTROL SYSTEM 3
ENGINEERING PROCEDURE SNS-ENG-G001

Date: 10/23/2001 Time: 18:14:57
Username: CJPE
R:\SNS\PLANT\TS\PLANT\TS_CAD\TS\SCA_SA\H2_P\TS\TS-10-34.DWG

AutoCAD