CIRCUIT NUMBER	EQUIPMENT NUMBER	NAME PLATE	LOAD HP	F.L. AMPS (NOTE 2)	# OF POLES	FRAME SIZE	TRIP	MOTOR CIRCUIT PROTECTOR (MCP) RATING	NEMA SIZE (NOTE 6)	OVERLOAD RELAY	INDICATOR LIGHT (NOTE 5)	AUX CONTACTS NO	AUX CONTACTS NC	CONTROL DEVICES (NOTE 3)	FEEDER (AWG) (NOTE 4)	GROUND WIRE (AWG)	CONDUIT SIZE (INCH)	DISC. SIZE (AMPS)	FUSE AS REQD. (AMPS)	REMARKS
MOTOR CONTROL MCC "TA-3MCC3" SCHEDULE (BASEMENT LEVEL)																				
	LOAD				CIRCUIT BREAKER				MOTOR STARTER (SEE NOTES 1 & 2)						FEEDER CIRCUIT			LOCAL SWITCH		
1	HY-TA-01	HYDRAULIC PUMP-01	75	96	3	–	–	150	4('SS')	SOLD STATE	R-G-A	2	2	H-O-A	1	6	2	100	UNFUSED	REFER TO NOTES 1 THRU 6 U.O.N (TYP)
2	FC-TA-15	DI ROOM	2	3.4	3	–	–	7	1	SOLD STATE	R-G-A	2	2	H-O-A	12	12	3/4	30	UNFUSED	
3	P-TA-10	TW BOOSTER PUMP	50	65	3	–	–	100	3	SOLD STATE	R-G-A	2	2	H-O-A	4	8	1-1/2	100	UNFUSED	
4	P-TA-11	TW BOOSTER PUMP (STDBY)/ 50HP	0	–		–	–			SOLD STATE	R-G-A	2	2	H-O-A						STANDBY
5	FC-TA-14	Fan coil Bottm Loading	1	2.1	3	–	–	3	1	SOLD STATE	R-G-A	2	2	H-O-A	12	12	3/4	30	UNFUSED	
6	FC-TA-16	Gold AMALGATION	2	3.4	3	–	–	7	1	SOLD STATE	R-G-A	2	2	H-O-A	12	12	3/4	30	UNFUSED	
7	EWH-TA-01	Electric Water Htr (45KW)	45	54	3	100	70								4	8	1-1/2	100	UNFUSED	
8	LCDM-01	LOWER IN-CELL DOOR MOTOR	1	2.1	3	–	–	3	1	SOLD STATE	R-G-A	2	2	H-O-A	12	12	3/4	30	UNFUSED	REFER TO DWG.J1-28-35-NEMA 1 FVR
9	P-TA-06	LWS2, HWS	60	77	3	–	–	150	4('SS')	SOLD STATE	R-G-A	2	2	H-O-A	2	6	1-1/2	100	UNFUSED	
10	P-TA-07	LWS2, HWS (STDBY)	0	–		–	–		4('SS')	SOLD STATE	R-G-A	2	2	H-O-A				100	UNFUSED	STANDBY
11	P-1520A	STAT. 2 COOLING LOOP PUMP A	20	27	3	–	–	50	2	SOLD STATE	R-G-A	2	2	H-O-A	8	10	1	60	UNFUSED	
12	P-1520B	STAT. 2 COOLING LOOP PUMP B	20	27	3	–	–	50	2	SOLD STATE	R-G-A	2	2	H-O-A	8	10	1	60	UNFUSED	
13	P-TA-08	LWS3	10	14	3	–	–	30	1	SOLD STATE	R-G-A	2	2	H-O-A	12	12	3/4	30	UNFUSED	
14	P-TA-09	LWS3 (STDBY).	10	–	3	–	–	30	1	SOLD STATE	R-G-A	2	2	H-O-A	12	12	3/4	30	UNFUSED	STANDBY
15	FC-TA-01	BASEMENT UTIL VLT #1 FCU	5	7.6	3	–	–	15	1	SOLD STATE	R-G-A	2	2	H-O-A	12	12	3/4	30	UNFUSED	
16	FC-TA-02	BASEMENT UTIL VLT #2 FCU	1.5	3	3	–	–	3	1	SOLD STATE	R-G-A	2	2	H-O-A	12	12	3/4	30	UNFUSED	
17	FC-TA-07	BASEMENT TARGET-Control Rm.	0.75	1.6	3	–	–	3	1	SOLD STATE	R-G-A	2	2	H-O-A	12	12	3/4	30	UNFUSED	
18	CCLM-TA-01	CASK CART LIFT MOTOR	10	14	3	–	–	30	1	SOLD STATE	R-G-A	2	2	H-O-A	12	12	3/4	30	UNFUSED	REFER TO DWG.J1-28-35-NEMA 1 FVR
19	CCDM-TA-01	Bottom Loading-Cask Cart Drive Mtr.	2	3.4	3	–	–	7	1	SOLD STATE	R-G-A	2	2	H-O-A	12	12	3/4	30	UNFUSED	REFER TO DWG.J1-28-35-NEMA 1 FVR
20	HPU-3012	Upper In-Cell HYD PWR Unit	20	27	3	–	–	50	2	SOLD STATE	R-G-A	2	2	H-O-A	8	10	1	30	UNFUSED	REFER TO DWG.J1-28-35-NEMA 1 FVNR
21	MC-TA-01	Mercury Condenser Chiller-14.4kw	20	27	3	–	–	50	2	SOLD STATE	R-G-A	2	2	H-O-A	8	10	1	30	UNFUSED	
22	WB-TA-01	PRESURE BOOST PP.	1	2.1	3	–	–	3	1	SOLD STATE	R-G-A	2	2	H-O-A	12	12	3/4	30	UNFUSED	
23	P-1000A	TW BOOSTER PUMP	50	65	3	–	–	100	3	SOLD STATE	R-G-A	2	2	H-O-A	4	8	1-1/2	100	UNFUSED	
24	P-1000B	TW BOOSTER PUMP (STDBY)/ 50HP	0	–		–	–			SOLD STATE	R-G-A	2	2	H-O-A						REFER TO DWG.J1-28-35-NEMA 1 FVNR
25		SPARE		–	3	–	–	–	1	SOLD STATE	R-G-A	2	2	H-O-A	–	–	–			
26		SPACE		–	–	–	–	–	–	–	–	–	–	–	–	–	–			

TOTAL HP=	406.25
LARGEST HP=	75
TOTAL CONNECTED F.L. AMPS=	521.7

STARTERS	TOTAL #
SIZE 1	13
SIZE 2	4
SIZE 3	2
SIZE 4	3
SIZE 5	0

NOTES:

1. AUX CONTACTS INDICATED HERE ARE ABOVE AND BEYOND THOSE NEEDED FOR THE AUTOMATIC CONTROLS IDENTIFIED IN THE DOCUMENTS.
2. FULL LOAD VALUES ARE FROM NEC TABLE 430-150.
3. H.O.A. HAND-OFF-AUTO SELECTOR SWITCH
4. ALL POWER AND CONTROL CABLES ARE TRAY CABLE (T.C) TYPE, THWN, MULTIPLE COPPER CONDUCTOR W/GROUNDING CONDUCTOR.
5. INDICATOR LIGHT: R=RED, G=GREEN, A=AMBER; 'R' DENOTES MOTOR RUNNING, 'G' DENOTES MOTOR IS STOPPED, BUT POWER IS AVAILABLE TO STARTER AND MOTOR CAN BE STARTED, 'A' DENOTES MOTOR HAS BEEN STOPPED BY AUTOMATIC MEANS AND A RESET MUST BE PERFORMED BEFORE MOTOR CAN BE STARTED.
6. 'SS' DENOTES SOLID STATE (SOFT START) STARTER.

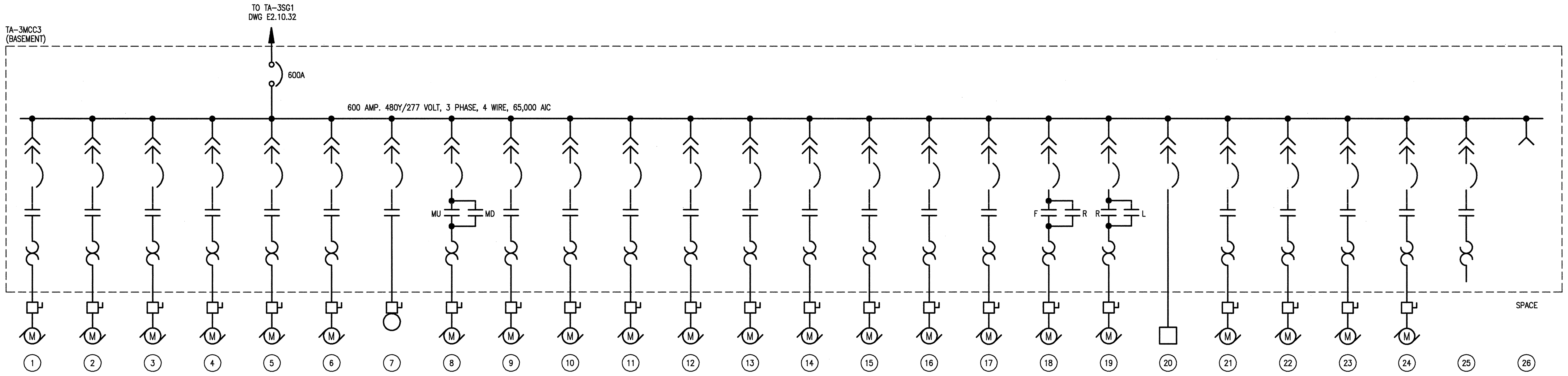

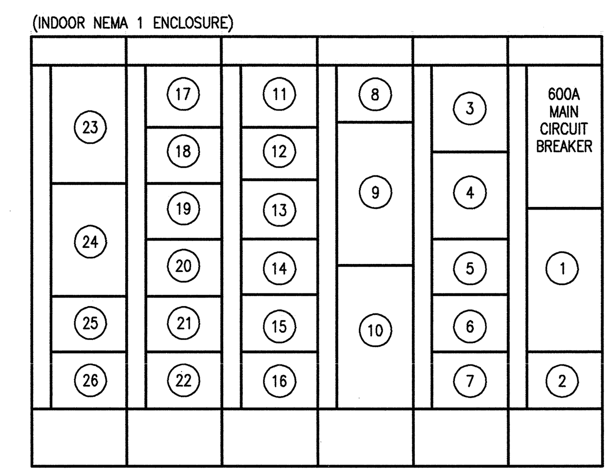

TA-3MCC3 ELEVATION

SCALE: NOT TO SCALE (DWG E4.B1.45)

CIRCUIT NUMBER	EQUIPMENT NUMBER	NAME PLATE	LOAD HP	F.L. AMPS (NOTE 2)	# OF POLES	FRAME SIZE	TRIP	MOTOR CIRCUIT PROTECTOR (MCP) RATING	NEMA SIZE (NOTE 6)	OVERLOAD RELAY	INDICATOR LIGHT (NOTE 5)	AUX CONTACTS NO	AUX CONTACTS NC	CONTROL DEVICES (NOTE 3)	FEEDER (AWG) (NOTE 4)	GROUND WIRE (AWG)	CONDUIT SIZE (INCH)	DISC. SIZE (AMPS)	FUSE AS REQD. (AMPS)	REMARKS
MOTOR CONTROL MCC "TA-3MCC4" SCHEDULE (HIGH BAY)																				
	LOAD				CIRCUIT BREAKER				MOTOR STARTER (SEE NOTES 1 & 2)						FEEDER CIRCUIT			LOCAL SWITCH		
1		SPARE		–	3	–	–		2	SOLD STATE	R-G-A	2	2	H-O-A	–	–	–	–	–	
2		SPACE		–	–	–	–	–	–	–	–	–	–		–	–	–	–	–	FEEDER: SEE NOTES 4 (TYP)
3	AH-TA-01	TRUSS LEVEL AHU-01	40	52	3	–	–	100	3	SOLD STATE	R-G-A	2	2	H-O-A	4	8	1-1/2	100	UNFUSED	
4	AH-TA-02	TRUSS LEVEL AHU-02	40	52	3	–	–	100	3	SOLD STATE	R-G-A	2	2	H-O-A	4	8	1-1/2	100	UNFUSED	
5	AH-TA-03	TRUSS LEVEL AHU-03	40	52	3	–	–	100	3	SOLD STATE	R-G-A	2	2	H-O-A	4	8	1-1/2	100	UNFUSED	
6	AH-TA-04	TRUSS LEVEL AHU-04	40	52	3	–	–	100	3	SOLD STATE	R-G-A	2	2	H-O-A	4	8	1-1/2	100	UNFUSED	
7	AH-TA-05	SPACE (30 HP) FUTURE	30	40		–	–													
8	AH-TA-06	SPACE (30 HP) FUTURE	30	40		–	–													
9	AH-TA-07	SPACE (30 HP) FUTURE	30	40		–	–													
10	AH-TA-08	SPACE (30 HP) FUTURE	30	40		–	–													
11	EF-TA-01	INSTR. LEVEL-ROOF FAN-01	7.5	11	3	–	20								12	12	3/4	30	UNFUSED	VARIABLE FREQUENCY DRIVE
12	EF-TA-02	INSTR. LEVEL-ROOF FAN-02	7.5	11	3	–	20								12	12	3/4	30	UNFUSED	VARIABLE FREQUENCY DRIVE
13	EF-TA-03	INSTR. LEVEL-ROOF FAN-03	7.5	11	3	–	20								12	12	3/4	30	UNFUSED	VARIABLE FREQUENCY DRIVE
14	EF-TA-04	INSTR. LEVEL-ROOF FAN-04	7.5	11	3	–	20								12	12	3/4	30	UNFUSED	VARIABLE FREQUENCY DRIVE
15	EF-TA-05	SPACE (7.5 HP) (FUTURE)	7.5	11		–	–													
16	EF-TA-06	SPACE (7.5 HP) (FUTURE)	7.5	11		–	–													
17	EF-TA-07	SPACE (7.5 HP) (FUTURE)	7.5	11		–	–													
18		SPACE				–	–													
19	EF-TA-10	BASEMENT TERTIARY EXHAUST	1.5	3	3	–	20								12	12	3/4	30	UNFUSED	VARIABLE FREQUENCY DRIVE
20		SPACE																		
21		SPACE																		
22		SPACE																		

TOTAL HP=	334
LARGEST HP=	40
TOTAL CONNECTED F.L. AMPS=	448

STARTERS	TOTAL #
SIZE 1	0
SIZE 2	1
SIZE 3	4
SIZE 4	0
SIZE 5	0

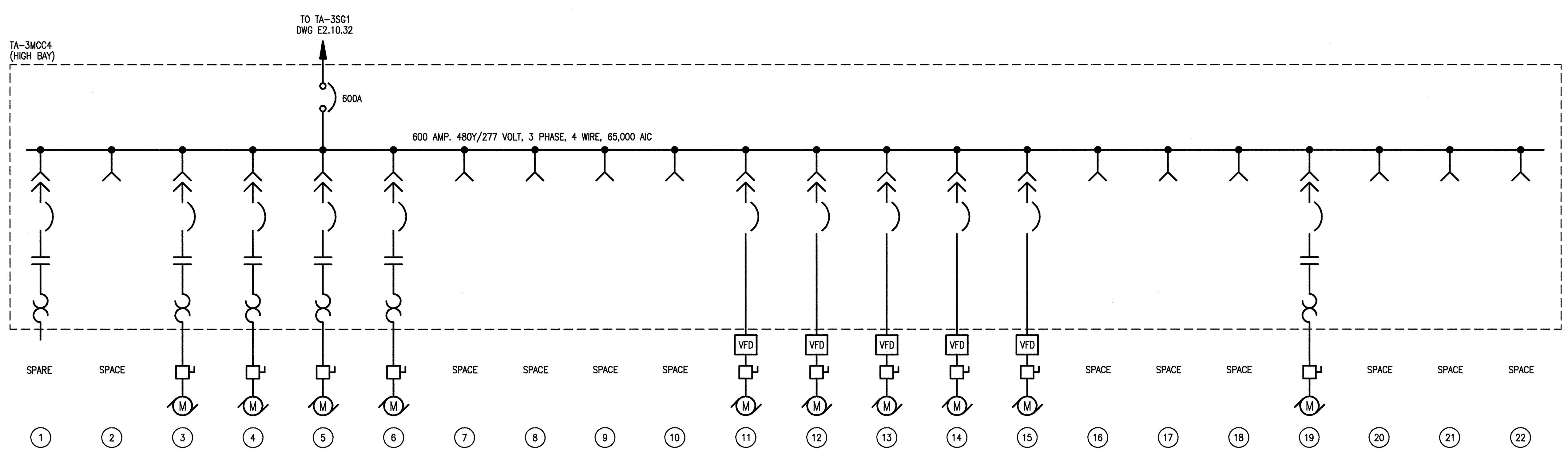

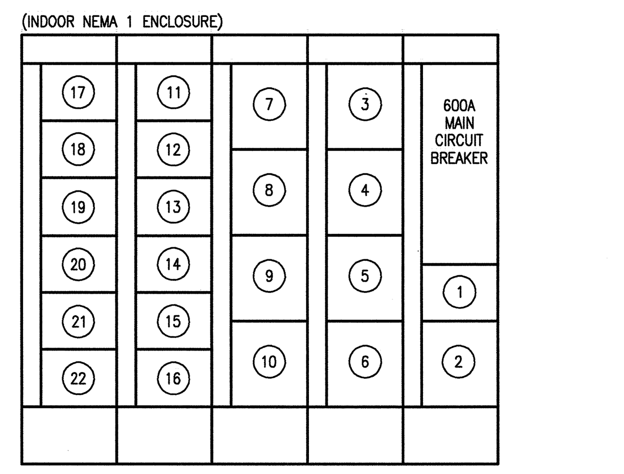

TA-3MCC4 ELEVATION

SCALE: NOT TO SCALE (DWG E4.03.49)

NO REPRESENTATION OR WARRANTY, EXPRESSED OR IMPLIED, IS MADE AS TO THE ACCURACY, COMPLETENESS OR USEFULNESS OF THE INFORMATION OR STATEMENTS CONTAINED IN THESE DRAWINGS, OR THAT THE USE OR DISCLOSURE OF ANY INFORMATION, APPARATUS, METHOD, OR PROCESS DISCLOSED IN THESE DRAWINGS MAY NOT INFRINGE PRIVATE RIGHTS OF OTHERS. NO LIABILITY IS ASSUMED WITH RESPECT TO THE USE OF, OR FOR DAMAGES RESULTING FROM THE USE OF ANY INFORMATION, APPARATUS, METHOD, OR PROCESS DISCLOSED IN THESE DRAWINGS. DRAWINGS MADE AVAILABLE FOR INFORMATION TO BIDDER ARE NOT TO BE USED FOR OTHER PURPOSES AND ARE TO BE RETURNED UPON REQUEST OF THE FORWARDING CONTRACTOR.

SECTION AND DETAIL KEY: NUMBER OF SECTION OR DETAIL / DRAWING ON WHICH SECTION OR DETAIL IS SHOWN OR TAKEN

THIS DOCUMENT CONTROLLED BY CHANGE CONTROL SYSTEM 3
ENGINEERING PROCEDURE SNS-ENG-G001

REV	CHANGE TYPE	CHANGE CONTROL SYSTEM	CHANGE REQUEST NUMBER	DESCRIPTION	DSN	CHK	DEPT	DATE	PE	DATE	PJ	DATE	REQ	DATE	UTB	DATE	RPE	RPE NO	DATE
0				CERTIFIED FOR CONSTRUCTION – 10/26/01	HG	VGS			RJD	11/15/01	RAD	11/14/01			JMF	11/14/01	VGS	00106009	10/26/01

REVISION OR ISSUE PURPOSE — REVISION APPROVALS

SQUAD CHECK: REW – WRS AK WRS BMJ – MP – ED / ST CV EC EE EM IE M PD SE AR

RPE			
VICTOR G. STEFFEN REGISTERED ENGINEER No. 00106009 STATE OF TENNESSEE	DSN	H.GROVER	10/26/01
	DRW	L. MAKOVSKY	10/26/01
	CHK	V.STEFFEN	10/26/01
	DEPT		
	PE	R.J. Garvey	11/15/01
	PJ	R A Dean	11/14/01
	REQ		
REV. 0 DATE 11-13-01	UTB	[signature]	11/14/01

DRAWING APPROVALS

108030700-E8E-8700-A220

Knight/Jacobs Joint Venture
701 Scarboro Road, MS 8253
Oak Ridge, TN 37830
865-241-9433
fax 865-241-3400

KNIGHT
Knight Advanced Technology
549 West Randolph Street
Chicago, IL 60661

UT-BATTELLE
Oak Ridge National Laboratory
managed for the DEPARTMENT OF ENERGY under U.S. GOVERNMENT contract DE-AC05-00OR22725
UT-BATTELLE, LLC, © Oak Ridge, Tennessee

PROJECT NAME:
SPALLATION NEUTRON SOURCE

TARGET BUILDING
MCC DETAILS

1	48	49	50	PLANT	BLDG	FL	SH.	OF	TYPE	CLASS
3	E	X	X	8	8700		1	1	D	U
51 NC	52 NA	53			WBS 1.8.3.7	E9.11.31				REV 0

AutoCAD

Date: 11/13/2001 Time: 11:22:40 Username: MAKOVSKYL