MOTOR CONTROL MCC "TA-3MCC1" SCHEDULE (BASEMENT LEVEL)

CIRCUIT NUMBER	LOAD: EQUIPMENT NUMBER	LOAD: NAME PLATE	LOAD: LOAD HP	LOAD: F.L. AMPS (NOTE 2)	CIRCUIT BREAKER: # OF POLES	CIRCUIT BREAKER: FRAME SIZE	CIRCUIT BREAKER: TRIP	MOTOR CIRCUIT PROTECTOR (MCP) RATING	MOTOR STARTER (SEE NOTES 1, & 2): NEMA SIZE (NOTE 6)	MOTOR STARTER: OVERLOAD RELAY	MOTOR STARTER: INDICATOR LIGHT (NOTE 5)	MOTOR STARTER: AUX CONTACTS NO	MOTOR STARTER: AUX CONTACTS NC	MOTOR STARTER: CONTROL DEVICES (NOTE 3)	FEEDER CIRCUIT: FEEDER (AWG) (NOTE 4)	FEEDER CIRCUIT: GROUND WIRE (AWG)	FEEDER CIRCUIT: CONDUIT SIZE (INCH)	LOCAL SWITCH: DISC. SIZE (AMPS)	LOCAL SWITCH: FUSE AS REQD. (AMPS)	REMARKS
1	AH-TA-09	BASEMENT LEVEL AHU	20	27	3	–	–	50	2	SOLD STATE	R-G-A	2	2	H-O-A	8	10	1	60	UNFUSED	
2	FC-TA-04	BASEMENT HVAC/ELEC. RM. FCU	0.75	1.6	3	–	–	3	1	SOLD STATE	R-G-A	2	2	H-O-A	12	12	3/4	30	UNFUSED	
3	P-TA-12	SENSIBLE CHW PP-12	25	34	3	–	–	50	2	SOLD STATE	R-G-A	2	2	H-O-A	8	10	1	–	–	VIA VFD-ON CHILLED WATER PUMPP-TA-12
4	P-TA-13	SENSIBLE CHW PP-13	25	34	3	–	–	50	2	SOLD STATE	R-G-A	2	2	H-O-A	8	10	1	–	–	VIA VFD-ON CHILLED WATER PUMPP-TA-13
5	LS-TA-01	SS-LIFT STATION	3	4.8	3	–	–	7	1	SOLD STATE	R-G-A	2	2	H-O-A	12	12	3/4	30	UNFUSED	REFER TO NOTES 1 THRU 6 U.O.N (TYP)
6	P-TA-01	LLLWP Process Waste	1.5	3	3	–	–	7	1	SOLD STATE	R-G-A	2	2	H-O-A	12	12	3/4	30	UNFUSED	
7	P-TA-02	LLLWP Process Waste(Stdby)(1.5 HP)	0			–	–	7		SOLD STATE	R-G-A	2	2	H-O-A				30	UNFUSED	
8	PUMP-8403	LLLW CIRC PP	7.5	11	3	–	–	15	1	SOLD STATE	R-G-A	2	2	H-O-A	12	12	3/4	30	UNFUSED	
9		SPARE																		
10		SPARE																		

TOTAL HP=	82.75
LARGEST HP=	25
TOTAL CONNECTED F.L. AMPS=	115.4

STARTERS	TOTAL #
SIZE 1	4
SIZE 2	3
SIZE 3	0
SIZE 4	0
SIZE 5	0

NOTES:

1. AUX CONTACTS INDICATED HERE ARE ABOVE AND BEYOND THOSE NEEDED FOR THE AUTOMATIC CONTROLS IDENTIFIED IN THE DOCUMENTS.
2. FULL LOAD VALUES ARE FROM NEC TABLE 430-150.
3. H.O.A. HAND-OFF-AUTO SELECTOR SWITCH
4. ALL POWER AND CONTROL CABLES ARE TRAY CABLE (T.C) TYPE, THWN, MULTIPLE COPPER CONDUCTOR W/GROUNDING CONDUCTOR.
5. INDICATOR LIGHT: R=RED, G=GREEN, A=AMBER; 'R' DENOTES MOTOR RUNNING, 'G' DENOTES MOTOR IS STOPPED, BUT POWER IS AVAILABLE TO STARTER AND MOTOR CAN BE STARTED, 'A' DENOTES MOTOR HAS BEEN STOPPED BY AUTOMATIC MEANS AND A RESET MUST BE PERFORMED BEFORE MOTOR CAN BE STARTED.
6. 'SS' DENOTES SOLID STATE (SOFT START) STARTER.

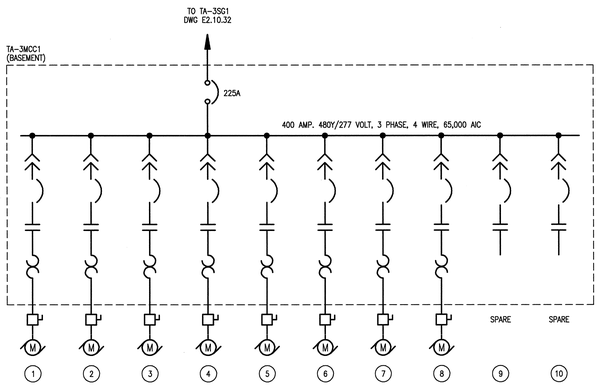

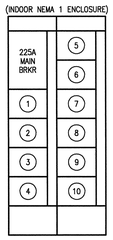

TA - 3MCC1 ELEVATION

SCALE: NOT TO SCALE (DWG E4.B1.49)

MOTOR CONTROL MCC "TA-3MCC2" SCHEDULE (BASEMENT LEVEL)

CIRCUIT NUMBER	LOAD: EQUIPMENT NUMBER	LOAD: NAME PLATE	LOAD: LOAD HP	LOAD: F.L. AMPS (NOTE 2)	CIRCUIT BREAKER: # OF POLES	CIRCUIT BREAKER: FRAME SIZE	CIRCUIT BREAKER: TRIP	MOTOR CIRCUIT PROTECTOR (MCP) RATING	MOTOR STARTER (SEE NOTES 1, & 2): NEMA SIZE (NOTE 6)	MOTOR STARTER: OVERLOAD RELAY	MOTOR STARTER: INDICATOR LIGHT (NOTE 5)	MOTOR STARTER: AUX CONTACTS NO	MOTOR STARTER: AUX CONTACTS NC	MOTOR STARTER: CONTROL DEVICES (NOTE 3)	FEEDER CIRCUIT: FEEDER (AWG) (NOTE 4)	FEEDER CIRCUIT: GROUND WIRE (AWG)	FEEDER CIRCUIT: CONDUIT SIZE (INCH)	LOCAL SWITCH: DISC. SIZE (AMPS)	LOCAL SWITCH: FUSE AS REQD. (AMPS)	REMARKS
1	P-TA-PDM	TARGET PLUG DRIVE MOTOR	8	9.6	3	–	–	15	1	SOLD STATE	R-G-A	2	2	H-O-A	12	12	3/4	30	UNFUSED	REFER TO NOTES 1 THRU 6 U.O.N (TYP)
2	P-2030A	STA#3 COOLING LOOP PUMP-A	20	27	3	–	–	50	2	SOLD STATE	R-G-A	2	2	H-O-A	8	10	1	60	UNFUSED	
3	P-2030B	STA#3 COOLING LOOP PUMP-B	20	27	3	–	–	50	2	SOLD STATE	R-G-A	2	2	H-O-A	8	10	1	60	UNFUSED	
4	P-2530A	HEAVY WATER STA. P.P #1	25	34	3	–	–	50	1	SOLD STATE	R-G-A	2	2	H-O-A	8	10	1	60	UNFUSED	
5	P-2530B	HEAVY Water STA.PP. #2 (STDBY)(25 HP)	0		3	–	–		1	SOLD STATE	R-G-A	2	2	H-O-A				60	UNFUSED	
6	FC-TA-03	UTILITY VAULT #4	1.5	3	3	–	–	7	1	SOLD STATE	R-G-A	2	2	H-O-A	12	12	3/4	30	UNFUSED	
7	TRM UTILITY	TRUSS HEATER LW STATION #3(13KW)	10	16	3	–	30	–	–	–	–	–	–	–	10	10	3/4			THERMAL MAGNETIC CIRCUIT BREAKER
8	FC-TA-13	CARBON FILTER RM-FAN COIL	1	2.1	3	–	–	3	1	SOLD STATE	R-G-A	2	2	H-O-A	12	12	3/4	30	UNFUSED	
9	FC-TA-03A	UTILITY VAULT #4	3	4.8	3	–	–	7	1	SOLD STATE	R-G-A	2	2	H-O-A	12	12	3/4	30	UNFUSED	
10		SPARE			3	–	–	–	1	SOLD STATE	R-G-A	2	2	H-O-A						

TOTAL HP=	88.5
LARGEST HP=	25
TOTAL CONNECTED F.L. AMPS=	123.5

STARTERS	TOTAL #
SIZE 1	7
SIZE 2	2
SIZE 3	0
SIZE 4	0
SIZE 5	0

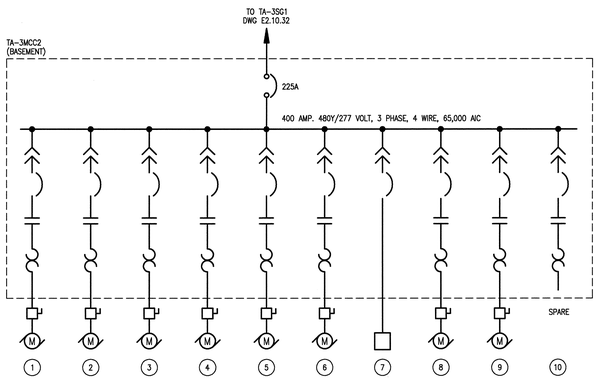

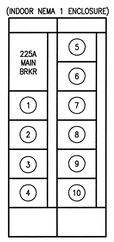

TA - 3MCC2 ELEVATION

SCALE: NOT TO SCALE (DWG E4.B1.49)

NO REPRESENTATION OR WARRANTY, EXPRESSED OR IMPLIED, IS MADE AS TO THE ACCURACY, COMPLETENESS OR USEFULNESS OF THE INFORMATION OR STATEMENTS CONTAINED IN THESE DRAWINGS, OR THAT THE USE OR DISCLOSURE OF ANY INFORMATION, APPARATUS, METHOD, OR PROCESS DISCLOSED IN THESE DRAWINGS MAY NOT INFRINGE PRIVATE RIGHTS OF OTHERS. NO LIABILITY IS ASSUMED WITH RESPECT TO THE USE OF, OR FOR DAMAGES RESULTING FROM THE USE OF ANY INFORMATION, APPARATUS, METHOD, OR PROCESS DISCLOSED IN THESE DRAWINGS. DRAWINGS MADE AVAILABLE FOR INFORMATION TO BIDDER ARE NOT TO BE USED FOR OTHER PURPOSES AND ARE TO BE RETURNED UPON REQUEST OF THE FORWARDING CONTRACTOR.

NUMBER OF SECTION OR DETAIL

DRAWING ON WHICH SECTION OR DETAIL IS SHOWN OR TAKEN

SECTION AND DETAIL KEY

THIS DOCUMENT CONTROLLED BY

CHANGE CONTROL SYSTEM 3

ENGINEERING PROCEDURE SNS-ENG-0001

REV	CHANGE TYPE	CHANGE CONTROL SYSTEM	CHANGE REQUEST NUMBER	DESCRIPTION	DSN	CHK	DEPT	DATE	PE	DATE	PJ	DATE	REQ	DATE	UTB	DATE	RPE	RPE NO	DATE	ST	CV	EC	EE	EM	IE	M	PD	SE	AR
0				CERTIFIED FOR CONSTRUCTION – 10/26/01	HG	VGS		11/18/01	RPO	11/16/01						11/16/01	VGS	00106009	10/26/01	REW	–	WRS	AK	WRS	BWJ	–	MP	–	ED

REVISION OR ISSUE PURPOSE — REVISION APPROVALS — SQUAD CHECK

RPE: VICTOR G. STEFFEN, REGISTERED ENGINEER, No. 00106009, STATE OF TENNESSEE, 11-13-01

DSN	H.GROVER	10/26/01
DRW	L. MAKOVSKY	10/26/01
CHK	V.STEFFEN	10/26/01
DEPT		
PE		11/19/01
PJ		11/16/01
REQ		
UTB		11/16/01

0 REV. 11-13-01 DATE — DRAWING APPROVALS

108030700-E8E-8700-A219

Knight/Jacobs Joint Venture
701 Scarboro Road, MS 8253
Oak Ridge, TN 37830
865-241-9433
fax 865-241-3400

KNIGHT
Knight Advanced Technology
540 West Randolph Street
Chicago, IL 60661

UT-BATTELLE
Oak Ridge National Laboratory
managed for the DEPARTMENT OF ENERGY under
U.S. GOVERNMENT contract DE-AC05-00OR22725
UT-BATTELLE, LLC. • Oak Ridge, Tennessee

PROJECT NAME:
SPALLATION NEUTRON SOURCE

TARGET BUILDING
MCC DETAILS

1	48	49	50	PLANT	BLDG	FL	SH.	OF	TYPE	CLASS
3	E	X	X	8	8700		1	1	D	U
51		52		53	WBS					REV
NC		NA			1.8.3.7		E9.11.30			0

Date: 11/13/2001 Time: 11:22:08
Username: GROVERHJ
C:\PROE_WILDFIRE\DATA\DGN\DEL\CADD\MDM_SA\TAD_PLOT\ZB-11-30.MDM