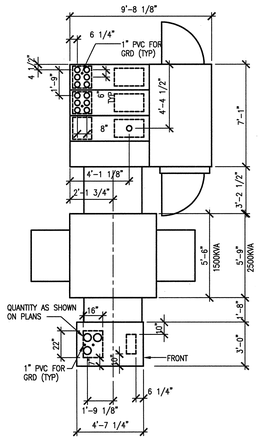

35 E8.10.03 TYPICAL STUB-UP DETAIL - HIGH RESISTANCE GRD. SWGR.
SCALE: NOT TO SCALE

1 DCN-T3-02

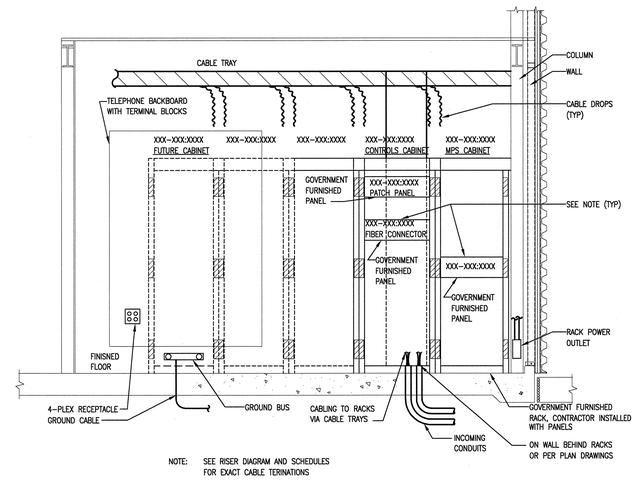

NOTE: SEE RISER DIAGRAM AND SCHEDULES FOR EXACT CABLE TERINATIONS

26 E8.10.03 TYPICAL COMMUNICATION ROOM LAYOUT
SCALE: NOT TO SCALE

1

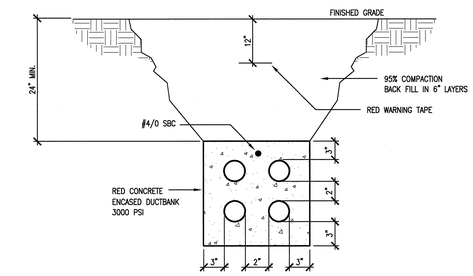

10 E8.10.03 TYPICAL DUCTBANK CONSTRUCTION DETAIL
SCALE: NOT TO SCALE

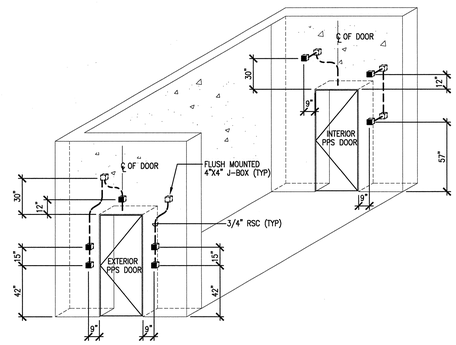

29 E8.10.03 PPS DOOR RACEWAY DETAIL
SCALE: NOT TO SCALE

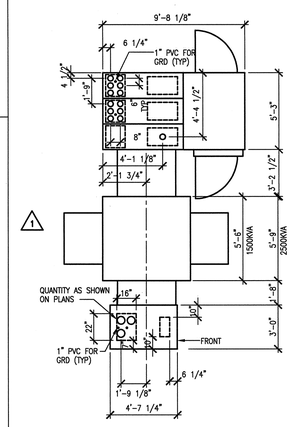

13 E8.10.03 TYP. STUB-UP DETAIL - SWITCHGEAR
SCALE: NOT TO SCALE

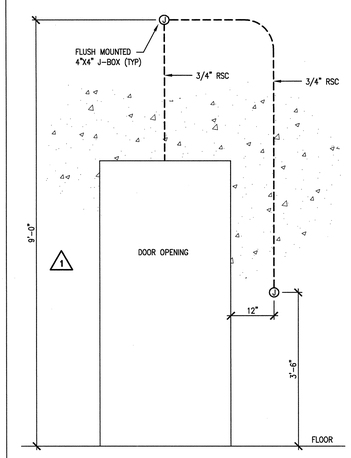

5 E8.10.03 DOOR SECURITY RACEWAY DETAIL
SCALE: NOT TO SCALE

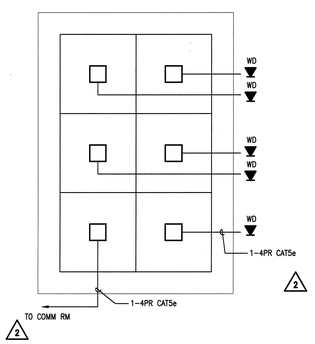

2

30 E8.10.03 REPEATER STATION
SCALE: NOT TO SCALE

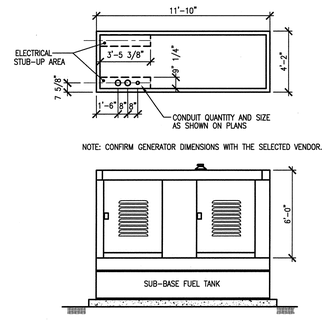

NOTE: CONFIRM GENERATOR DIMENSIONS WITH THE SELECTED VENDOR.

23 E8.10.03 TYP. STUB-UP DETAIL 300 KW DIESEL GEN SET
SCALE: NOT TO SCALE

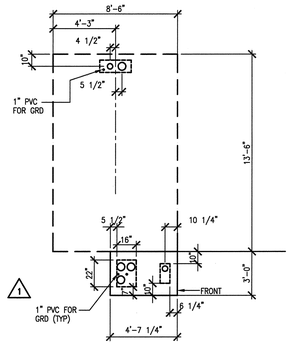

15 E8.10.03 TYP. STUB-UP DETAIL 13.8 KV POWER SUPPLY
SCALE: NOT TO SCALE

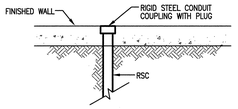

6 E8.10.03 TYPICAL CONDUIT STUB-OUT
SCALE: NOT TO SCALE

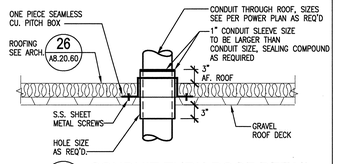

32 E8.10.03 CONDUIT-THRU ROOF DETAIL
SCALE: NOT TO SCALE

2

NO REPRESENTATION OR WARRANTY, EXPRESSED OR IMPLIED, IS MADE AS TO THE ACCURACY, COMPLETENESS OR USEFULNESS OF THE INFORMATION OR STATEMENTS CONTAINED IN THESE DRAWINGS, OR THAT THE USE OR DISCLOSURE OF ANY INFORMATION, APPARATUS, METHOD, OR PROCESS DISCLOSED IN THESE DRAWINGS MAY NOT INFRINGE PRIVATE RIGHTS OF OTHERS. NO LIABILITY IS ASSUMED WITH RESPECT TO THE USE OF, OR FOR DAMAGES RESULTING FROM THE USE OF ANY INFORMATION, APPARATUS, METHOD, OR PROCESS DISCLOSED IN THESE DRAWINGS. DRAWINGS MADE AVAILABLE FOR INFORMATION TO BIDDER ARE NOT TO BE USED FOR OTHER PURPOSES AND ARE TO BE RETURNED UPON REQUEST OF THE FORWARDING CONTRACTOR.

NUMBER OF SECTION OR DETAIL
DRAWING ON WHICH SECTION OR DETAIL IS SHOWN OR TAKEN
SECTION AND DETAIL KEY

THIS DOCUMENT CONTROLLED BY
CHANGE CONTROL SYSTEM 4
ENGINEERING PROCEDURE SNS-ENG-G001

REV	CHANGE TYPE	CHANGE CONTROL SYSTEM	CHANGE REQUEST NUMBER	DESCRIPTION	DSN	CHK	DEPT	DATE	PE	DATE	PJ	DATE	REQ	DATE	UTB	DATE	RPE	RPE NO	DATE	ST	CV	EC	EE	EM	IE	M	PD	SE	AR
3	C	4	–	FELK – BASIS OF AWARD – 10/3/01	LP	VGS			CLG	10/04/01	TJM	10/5/01					TJM	10/04/01	VGS	106009	10/03/01	SC	AW	BS	RL	BS	BJ	–	BS	–	WS
2				CERTIFIED FOR CONSTRUCTION – 07/27/01	LP	VGS													VGS	106009	06/27/01	SC	AW	BS	RL	BS	BJ	–	BS	–	WS
1				REVISED AS INDICATED – 6/27/01	LP	VGS			CLG	6/28/01	TJM	6/28/01			JRL	6/28/01	VGS	106009	06/27/01	SC	AW	BS	RL	BS	BJ	–	BS	–	WS
0				ISSUED FOR CONSTRUCTION–3/30/01	LP	VGS			CLG	4-2-01	TJM	4-2-01			JRL	4-2-01	VGS	106009	03/30/01	SP	TW	BS	RL	BS	BJ	/	BS	/	WS

DESCRIPTION — REVISION OR ISSUE PURPOSE; DATE — REVISION APPROVALS; RPE — SQUAD CHECK

RPE			
	DSN	L. PACHECO	3/30/01
	DRW	L. PACHECO	3/30/01
	CHK	V. STEFFEN	3/30/01
	DEPT		
	PE	C. GARREN	4/2/01
	PJ	T. MCLAUGHLIN	4/2/01
	REQ		
	UTB	J.R.LAWSON	4/2/01

VICTOR G. STEFFEN REGISTERED ENGINEER CIVIL No. 00106001 STATE OF TENNESSEE

REV. 3 DATE 10-4-01 — DRAWING APPROVALS

108030000-E8E-8000-A002

Knight Jacobs
Knight/Jacobs Joint Venture
701 Scarboro Road, MS 8253
Oak Ridge, TN 37830
865-241-9433
fax 865-241-3400

KNIGHT
Knight Advanced Technology
1453 Mission Street
San Francisco, CA 94103

UT-BATTELLE
Oak Ridge National Laboratory
managed for the DEPARTMENT OF ENERGY under U.S. GOVERNMENT contract DE-AC05-000R22725
UT-BATTELLE, LLC. ® Oak Ridge, Tennessee

PROJECT NAME:
SPALLATION NEUTRON SOURCE
ELECTRICAL RACEWAY DETAILS

1	48	49	50	PLANT	BLDG	FL	SH.	OF	TYPE	CLASS
3	E	X	X	8	8000		1	1	D	U
51		52		53	WBS					REV
NC		NA			1.8.3		E8.10.03			3

AutoCAD