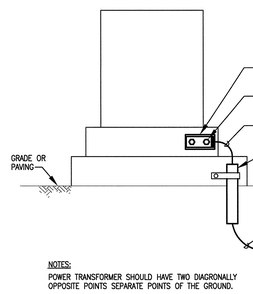

NOTES:
POWER TRANSFORMER SHOULD HAVE TWO DIAGRONALLY OPPOSITE POINTS SEPARATE POINTS OF THE GROUND.

42 – TRANSFORMER GROUND DETAIL
SCALE: NOT TO SCALE

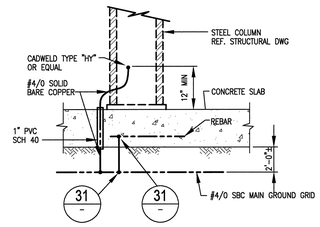

34 – STEEL COLUMN GROUNDING DETAIL
SCALE: NOT TO SCALE

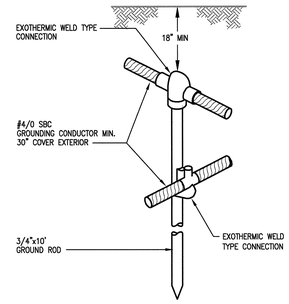

26 – GROUND ROD CABLE CONN. DETAIL
SCALE: NOT TO SCALE

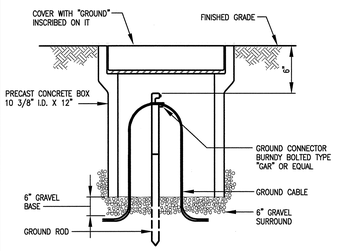

18 – GROUND WELL DETAIL
SCALE: NOT TO SCALE

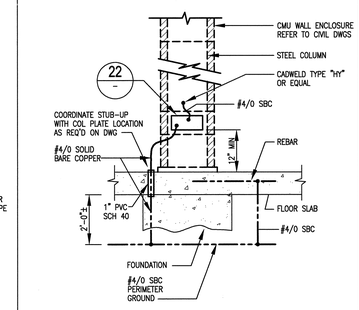

10 – COLUMN/GROUND BAR GROUNDING DETAIL
SCALE: NOT TO SCALE

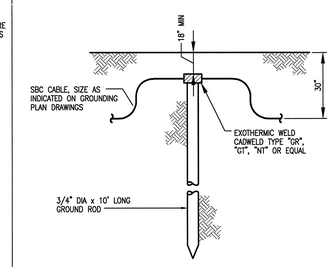

2 – GROUND ROD DETAIL
SCALE: NOT TO SCALE

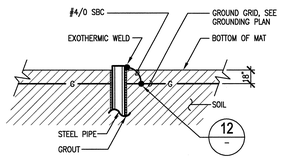

43 – FOUNDATION PILE GROUNDING DETAIL
SCALE: NOT TO SCALE

6A TARGET DCN TD01-013

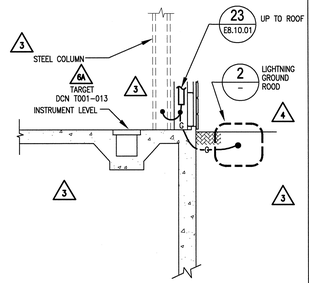

36 – LIGHTNING PROTECTION GROUND
SCALE: NOT TO SCALE

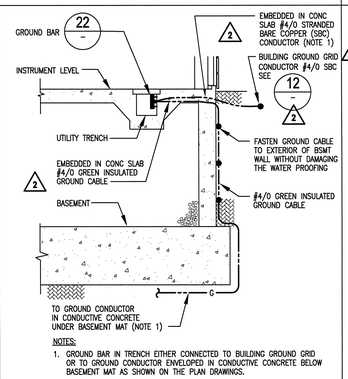

NOTES:
1. GROUND BAR IN TRENCH EITHER CONNECTED TO BUILDING GROUND GRID OR TO GROUND CONDUCTOR ENVELOPED IN CONDUCTIVE CONCRETE BELOW BASEMENT MAT AS SHOWN ON THE PLAN DRAWINGS.

28 – INSTR. TRENCH GROUND PLATE
SCALE: NOT TO SCALE

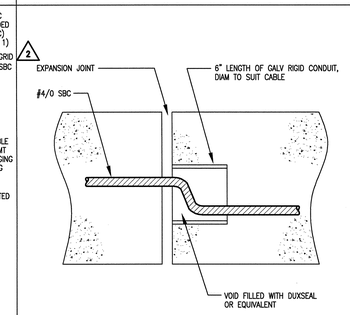

20 – GROUND CABLE CROSSING AT EXPANSION JOINT
SCALE: NOT TO SCALE

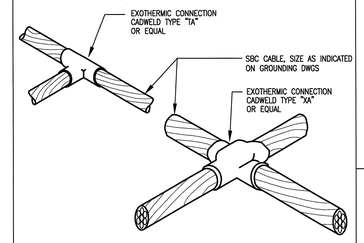

12 – GROUND CABLE CONNECTION DETAIL
SCALE: NOT TO SCALE

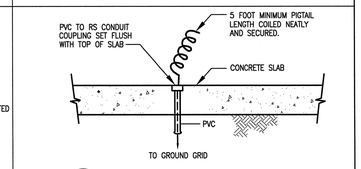

3 – TYP. PIGTAIL GROUND DETAIL
SCALE: NOT TO SCALE

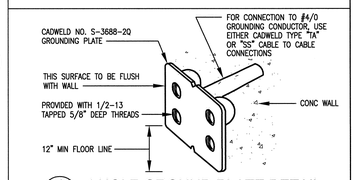

4 – 4 HOLE GROUND PLATE DETAIL
SCALE: NOT TO SCALE

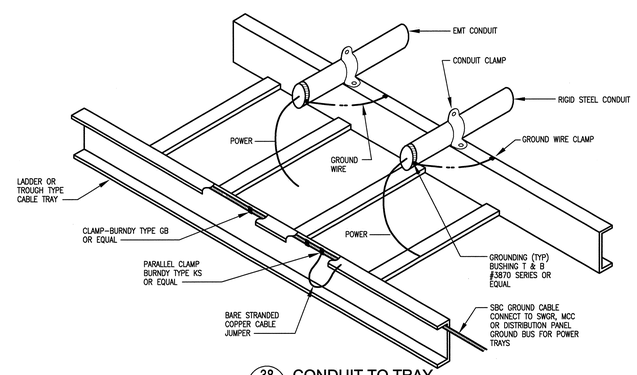

38 – CONDUIT TO TRAY
SCALE: NOT TO SCALE

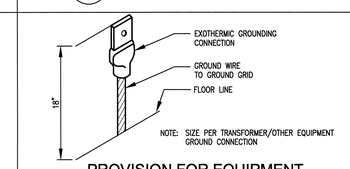

21 – PROVISION FOR EQUIPMENT GROUND EXTENSION DETAIL
SCALE: NOT TO SCALE

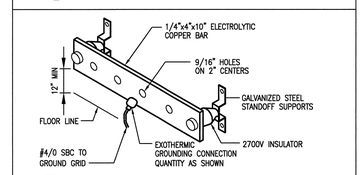

22 – GROUND BAR ASSEMBLY DETAIL
SCALE: NOT TO SCALE

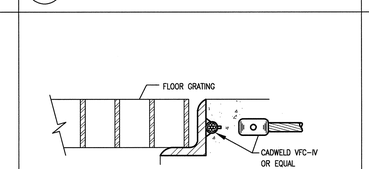

HATCH FRAME

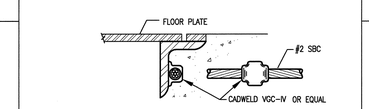

FLOOR STEEL FRAME

14 – HATCH & FLOOR STEEL PLATE GROUNDING
SCALE: NOT TO SCALE

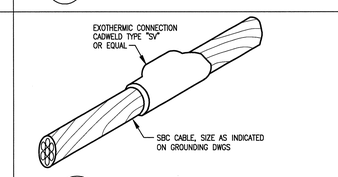

5 – SPLICE CONNECTION DETAIL
SCALE: NOT TO SCALE

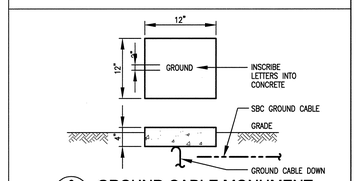

6 – GROUND CABLE MONUMENT
SCALE: NOT TO SCALE

6B TARGET DCN TD01-013

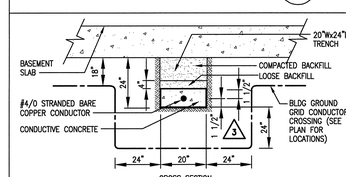

CROSS SECTION

39 – INSTR SIGNAL GROUND ELECTRODE
SCALE: NOT TO SCALE

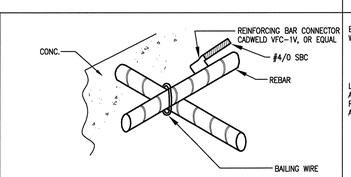

31 – CONCRETE REBAR GROUNDING
SCALE: NOT TO SCALE

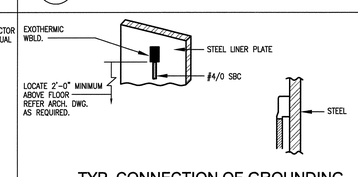

23 – TYP. CONNECTION OF GROUNDING CABLE TO STEEL SURFACE
SCALE: NOT TO SCALE

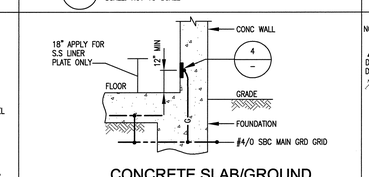

15 – CONCRETE SLAB/GROUND PLATE GROUNDING DETAIL
SCALE: NOT TO SCALE

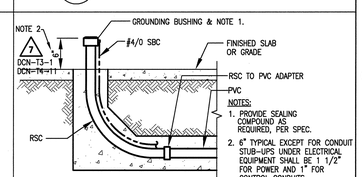

NOTES:
1. PROVIDE SEALING COMPOUND AS REQUIRED, PER SPEC.
2. 6" TYPICAL EXCEPT FOR CONDUIT STUB-UPS UNDER ELECTRICAL EQUIPMENT SHALL BE 1 1/2" FOR POWER AND 1" FOR CONTROL CONDUITS.

7 – TYPICAL CONDUIT STUB-UP
SCALE: NOT TO SCALE

7 DCN-T3-1 DCN-T4-11

2

NO REPRESENTATION OR WARRANTY, EXPRESSED OR IMPLIED, IS MADE AS TO THE ACCURACY, COMPLETENESS OR USEFULNESS OF THE INFORMATION OR STATEMENTS CONTAINED IN THESE DRAWINGS, OR THAT THE USE OR DISCLOSURE OF ANY INFORMATION, APPARATUS, METHOD, OR PROCESS DISCLOSED IN THESE DRAWINGS MAY NOT INFRINGE PRIVATE RIGHTS OF OTHERS. NO LIABILITY IS ASSUMED WITH RESPECT TO THE USE OF, OR FOR DAMAGES RESULTING FROM THE USE OF ANY INFORMATION, APPARATUS, METHOD, OR PROCESS DISCLOSED IN THESE DRAWINGS. DRAWINGS MADE AVAILABLE FOR INFORMATION TO BIDDER ARE NOT TO BE USED FOR OTHER PURPOSES AND ARE TO BE RETURNED UPON REQUEST OF THE FORWARDING CONTRACTOR.

NUMBER OF SECTION OR DETAIL
DRAWING ON WHICH SECTION OR DETAIL IS SHOWN OR TAKEN
SECTION AND DETAIL KEY

THIS DOCUMENT CONTROLLED BY
CHANGE CONTROL SYSTEM 4
ENGINEERING PROCEDURE SNS-ENG-0001

REV	CHANGE TYPE	CHANGE CONTROL SYSTEM	CHANGE REQUEST NUMBER	DESCRIPTION	DSN	CHK	DEPT
7	C	4	11	FELK – BASIS OF AWARD, DCN 11 – 10/3/01	LP	VGS	
6				TARGET DCN T-001 THRU T-013 – 9/21/01	HG	VGS	
5				CERTIFIED FOR CONSTRUCTION – 08/03/01	LP	VGS	
4				CERTIFIED FOR CONSTRUCTION – 08/01/01	LP	VGS	
3				CERTIFIED FOR CONSTRUCTION – 07/27/01	LP	VGS	
2				REVISED AS INDICATED – 6/27/01	LP	VGS	
1				REVISED DETAILS 28, 36. ADDED DETAIL39 – 4/13/01	LP	VGS	
0				ISSUED FOR CONSTRUCTION–3/30/01	LP	VGS	

REVISION OR ISSUE PURPOSE

DATE	PE	DATE	PJ	DATE	REQ	DATE	UTB	DATE	RPE	RPE NO	DATE
	CLG	6/28/01	TJM	6/28/01			JRL	6/28/01	VGS	106009	10/03/01
	MD	4/23/01	RD	4/23/01			JRL	4/23/01	VGS	106009	09/21/01
	CLG	4-2-01	TJM	4-2-01			JRL	4-2-01	VGS	106009	08/03/01
									VGS	106009	08/01/01
									VGS	106009	07/27/01
									VGS	106009	06/27/01
									VGS	106009	04/18/01
									VGS	106009	03/30/01

REVISION APPROVALS

SQUAD CHECK										
SC	AW	BS	RL	BS	BJ	–	BS	–	WS
SC	AW	BS	RL	BS	BJ	–	BS	–	WS
SC	AW	BS	RL	BS	BJ	–	BS	–	WS
SC	AW	BS	RL	BS	BJ	–	BS	–	WS
SC	AW	BS	RL	BS	BJ	–	BS	–	WS
SC	AW	BS	RL	BS	BJ	–	BS	–	WS
SC	AW	BS	RL	BS	BJ	–	BS	–	WS
SC	AW	BS	RL	BS	BJ	–	BS	–	WS
SP	TW	BS	RL	BS	BJ	/	BS	/	WS
ST	CV	EC	EE	EM	IE	M	PD	SE	AR

RPE
VICTOR G. STEFFEN REGISTERED ENGINEER No. 001060 STATE OF TENNESSEE
7 REV. 10-4-01 DATE

DRAWING APPROVALS		
DSN	L. PACHECO	3/30/01
DRW	L. PACHECO	3/30/01
CHK	V. STEFFEN	3/30/01
DEPT		
SE	C. CARREN	4/2/01
PJ	T. MCLAUGHLIN	4/2/01
REQ		
UTB	J.R.LAWSON	4/2/01

108030000-E8E-8000-A001

Knight/Jacobs Joint Venture
701 Scarboro Road, MS 8253
Oak Ridge, TN 37830
865-241-9433
fax 865-241-3400

KNIGHT
Knight Advanced Technology
1453 Mission Street
San Francisco, CA 94103

UT-BATTELLE
Oak Ridge National Laboratory
managed for the DEPARTMENT OF ENERGY under U.S. GOVERNMENT contract DE-AC05-00OR22725
UT-BATTELLE, LLC, ® Oak Ridge, Tennessee

PROJECT NAME:
SPALLATION NEUTRON SOURCE
GROUNDING DETAILS

1	48	49	50	PLANT	BLDG	FL	SH.	OF	TYPE	CLASS
3	E	X	X	8	8000		1	1	D	U
51	52	53	WBS							REV
NC	NA		1.8.3				E8.10.02			7

Date: 10/03/2001
Time: 13:08:57
AutoCAD
H:\DWG_JACS\PROJECTS\8000\100_CAD\D\NEW_GR\N0_FLOR\E8-10-02.DWG