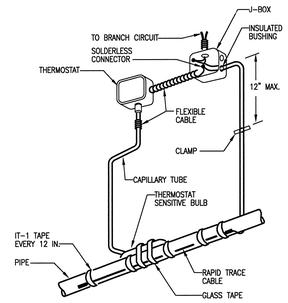

50 HEAT TRACING INSTALLATION GENERAL DETAILS
SCALE: NOT TO SCALE

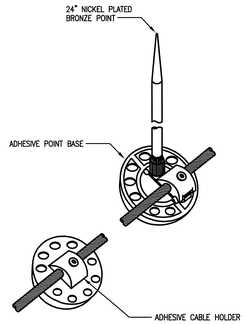

42 AIR TERMINAL
SCALE: NOT TO SCALE

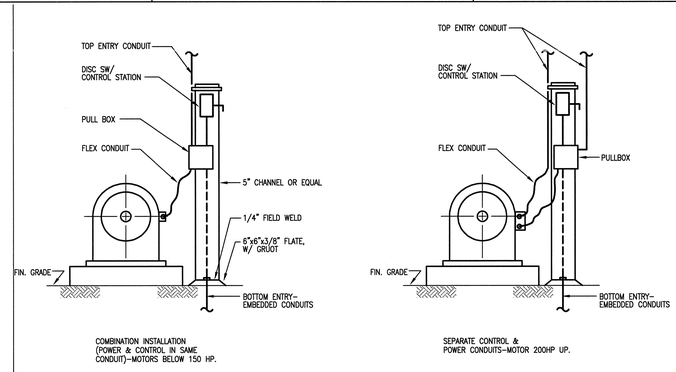

34 TYPICAL LOCAL CONTROL STATION INSTALLATION
SCALE: NOT TO SCALE

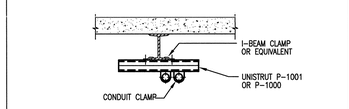

17 TYPICAL ARRANGEMENT OF MULTIPLE CONDUIT SUPPORT AT BEAM
SCALE: NOT TO SCALE

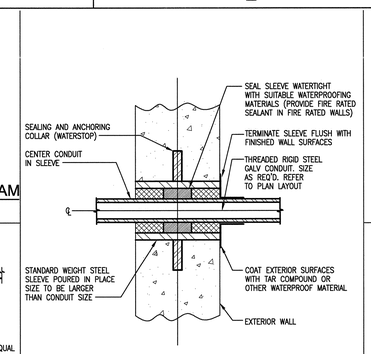

10 CONDUIT SLEEVE DETAIL EXTERIOR CONCRETE WALL
SCALE: NOT TO SCALE

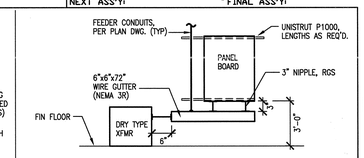

1 TYPICAL-PANELBOAD INSTALLATION DETAIL
SCALE: NOT TO SCALE

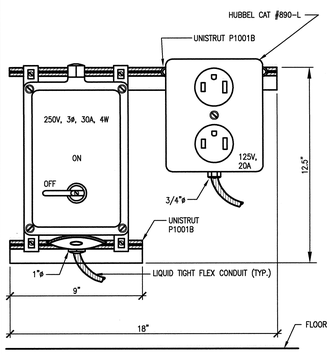

52 RECEPTACLES ON UNISTRUT DETAIL
SCALE: NOT TO SCALE

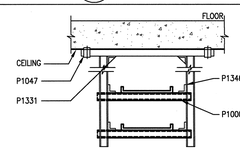

43 TYPICAL CABLE TRAY AND/OR CONDUIT SUPPORT AT CONC. CEILING
SCALE: NOT TO SCALE

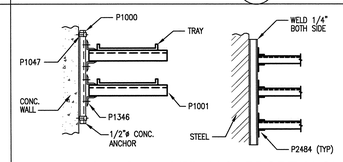

35 TYPICAL CABLE TRAY SUPPORT ALONG WALL OR STRUCTURAL MEMBER
SCALE: NOT TO SCALE

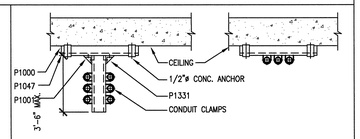

26 TYPICAL ARRANGEMENT OF CONDUIT SUPPORT FROM CONC. CEILING
SCALE: NOT TO SCALE

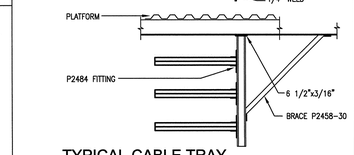

19 TYPICAL CABLE TRAY AND/OR CONDUITS SUPPORT ON SAME SIDE HANGER OR WALL
SCALE: NOT TO SCALE

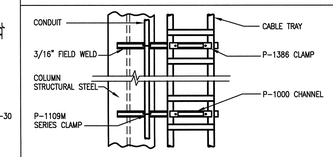

11 VERTICAL TRAY AND/OR CONDUIT SUPPORT
SCALE: NOT TO SCALE

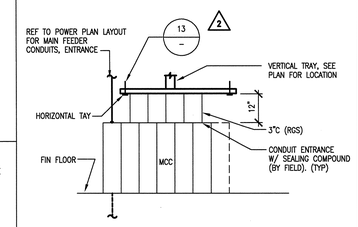

4 TYPICAL-MCC & CABLE TRAY ARRANGEMENT FOR CABLE DROPOUTS
SCALE: NOT TO SCALE

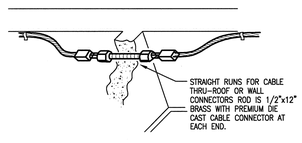

44 THRU-ROOF OR WALL DOWNLEAD FITTINGS
SCALE: NOT TO SCALE

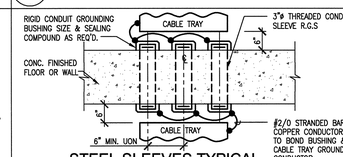

36 STEEL SLEEVES TYPICAL ARRANGEMENT OF PENETRATION FOR TRAYS - WALL OR FLOOR
SCALE: NOT TO SCALE

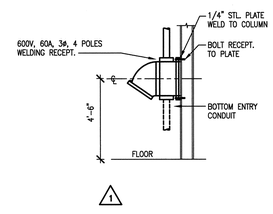

29 TYPICAL 480V-WELDING RECEPTACLE STEEL MOUNTING DETAIL
SCALE: NOT TO SCALE

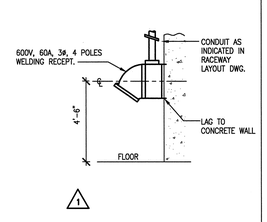

21 TYPICAL 480V-WELDING RECEPTACLE CONC. WALL MOUNTING DETAIL
SCALE: NOT TO SCALE

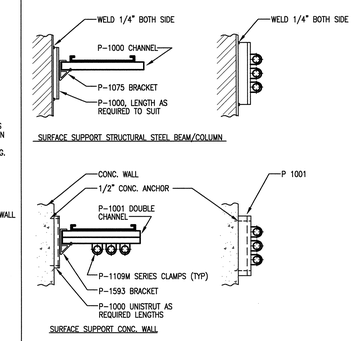

13 CABLE TRAY AND/OR CONDUIT SUPPORT
SCALE: NOT TO SCALE

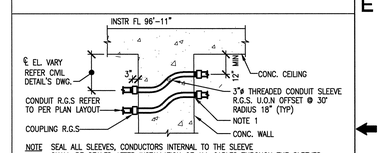

NOTE SEAL ALL SLEEVES, CONDUCTORS INTERNAL TO THE SLEEVE SHALL BE SEALED AFTER INSTALLATION OF ALL CABLES THROUGH THE SLEEVES.

5 TYPICAL-CONDUIT SLEEVE-CONDUIT PENERATION SHIELD CONC WALL
SCALE: NOT TO SCALE

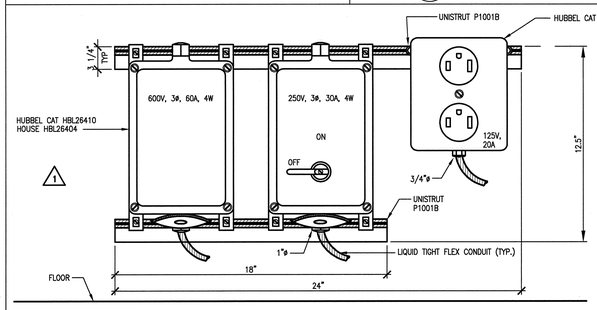

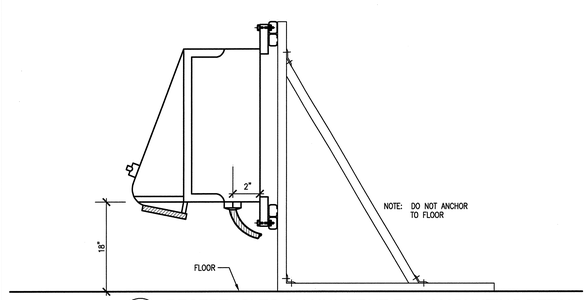

55 RECEPTACLES ON UNISTRUT RACK MOUNTING DETAIL
SCALE: NOT TO SCALE

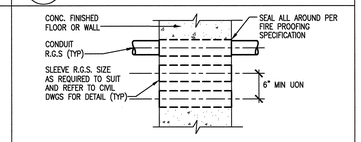

37 CONDUIT SLEEVES TYPICAL ARRANGEMENT OF PENETRATION FOR CONDUIT - PLAN
SCALE: NOT TO SCALE

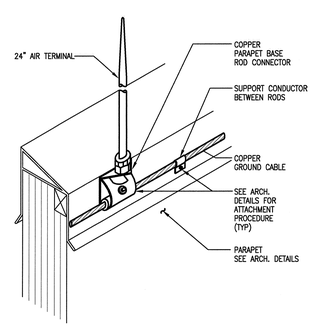

39 LIGHTNING PROTECTION
SCALE: NOT TO SCALE

NOTES:

A. AIR TERMINALS SHALL BE 24" HIGH.

B. AIR TERMINAL SUPPORTS SHALL BE AT NOT LESS THAN ONE-HALF THE HEIGHT OF THE AIR TERMINAL.

1. AIR TERMINALS SHALL BE PLACED AT OR WITHIN 2 FT OF THE ENDS OF RIDGES OR EDGES AND CORNER OF ROOFS

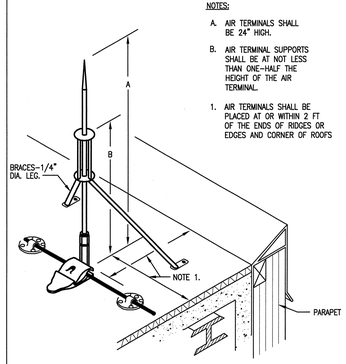

31 AIR TERMINAL SUPPORT DETAIL
SCALE: NOT TO SCALE

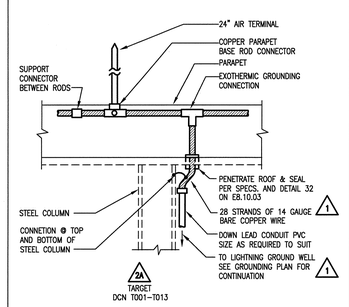

23 LIGHTNING PROTECTION AIR TERMINAL CONDUCTOR TO MAIN GROUND GRID CONNECTION DETAIL
SCALE: NOT TO SCALE

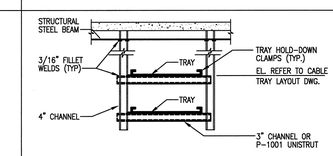

14 TYPICAL CABLE TRAY AND/OR CONDUIT SUPPORT-STEEL BEAM
SCALE: NOT TO SCALE

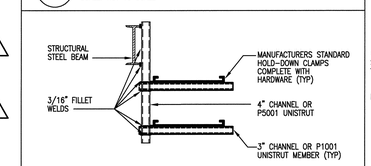

15 CABLE TRAY AND/OR CONDUIT SUPPORT-BELOW BEAM
SCALE: NOT TO SCALE

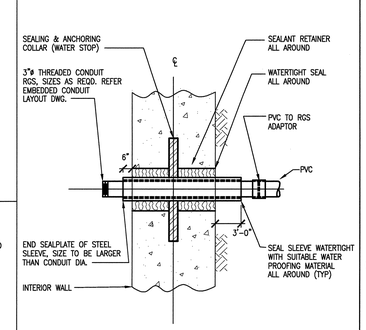

7 DOUBLE CONTAINED CONDUIT SLEEVE PENETRATION THRU EXTERIOR WALL DETAIL
SCALE: NOT TO SCALE

NO REPRESENTATION OR WARRANTY, EXPRESSED OR IMPLIED, IS MADE AS TO THE ACCURACY, COMPLETENESS OR USEFULNESS OF THE INFORMATION OR STATEMENTS CONTAINED IN THESE DRAWINGS, OR THAT THE USE OR DISCLOSURE OF ANY INFORMATION, APPARATUS, METHOD, OR PROCESS DISCLOSED IN THESE DRAWINGS MAY NOT INFRINGE PRIVATE RIGHTS OF OTHERS. NO LIABILITY IS ASSUMED WITH RESPECT TO THE USE OF, OR FOR DAMAGES RESULTING FROM THE USE OF ANY INFORMATION, APPARATUS, METHOD, OR PROCESS DISCLOSED IN THESE DRAWINGS. DRAWINGS MADE AVAILABLE FOR INFORMATION TO BIDDER ARE NOT TO BE USED FOR OTHER PURPOSES AND ARE TO BE RETURNED UPON REQUEST OF THE FORWARDING CONTRACTOR.

NUMBER OF SECTION OR DETAIL
DRAWING ON WHICH SECTION OR DETAIL IS SHOWN OR TAKEN
SECTION AND DETAIL KEY

THIS DOCUMENT CONTROLLED BY
CHANGE CONTROL SYSTEM 4
ENGINEERING PROCEDURE SNS-ENG-G001

REV	CHANGE TYPE	CHANGE CONTROL SYSTEM	CHANGE REQUEST NUMBER	DESCRIPTION	DSN	CHK	DEPT	DATE	PE	DATE	PJ	DATE	REQ	DATE	UTB	DATE	RPE	RPE NO	DATE	ST	CV	EC	EE	EM	IE	M	PD	SE	AR
3	C	4	–	FELK – BASIS OF AWARD – 10/3/01	LP	VGS		CLG 10/3/01	DAN 10/3/01								VGS	106009	10/03/01	SC	AW	BS	RL	BS	BJ	–	BS	–	WS
2				TARGET DCN T-001 THRU T-013 & GENERAL REVS – 9/21/01	LP	VGS											VGS	106009	09/21/01	SC	AW	BS	RL	BS	BJ	–	BS	–	WS
1				REVISED AS INDICATED – 6/27/01	LP	VGS		CLG	6/28/01	TJM	6/28/01				JRL	6/28/01	VGS	106009	06/27/01	SC	AW	BS	RL	BS	BJ	–	BS	–	WS
0				ISSUED FOR CONSTRUCTION – 4/18/01	LP	VGS		MD	4/23/01	RD	4/23/01				JRL	4/23/01	VGS	106009	04/18/03	SC	AW	BS	RL	BS	BJ	–	BS	–	WS

REVISION OR ISSUE PURPOSE — REVISION APPROVALS — SQUAD CHECK

RPE: VICTOR G. STEFFEN, REGISTERED ENGINEER, No. 001040, COMMONWEALTH OF TENNESSEE, STATE OF TENNESSEE — 10-4-01
3 10-4-01
REV. DATE

DSN	L. PACHECO	04/18/01
DRW	L. PACHECO	04/18/01
CHK	V. STEFFEN	4/18/01
DEPT		
PE	C. GARREN	4/2/01
PJ	T. MCLAUGHLIN	4/2/01
REQ		
UTB	J.R.LAWSON	4/2/01

DRAWING APPROVALS

108000000-E8E-8000-A002

Knight/Jacobs Joint Venture
701 Scarboro Road, MS 8253
Oak Ridge, TN 37830
865-241-9433
fax 865-241-3400

KNIGHT
Knight Advanced Technology
1401 Mission Street
San Francisco, CA 94103

UT-BATTELLE
Oak Ridge National Laboratory
managed for the DEPARTMENT OF ENERGY under U.S. GOVERNMENT contract DE-AC05-00OR22725
UT-BATTELLE, LLC. • Oak Ridge, Tennessee

PROJECT NAME:
SPALLATION NEUTRON SOURCE
GENERAL DETAILS

1	48	49	50	PLANT	BLDG	FL	SH.	OF	TYPE	CLASS
3	E	X	X	8	8000		1	1	D	U
51		52		53	WBS					REV
NC		NA			1.8		E8.10.01			3

Date: 10/03/2001 Time: 15:10:23
Username: GARREN
C:DRAWINGS\PROJECTS\7000\100_0400\108_000\NED_PLOT\E8-10-01.DWG