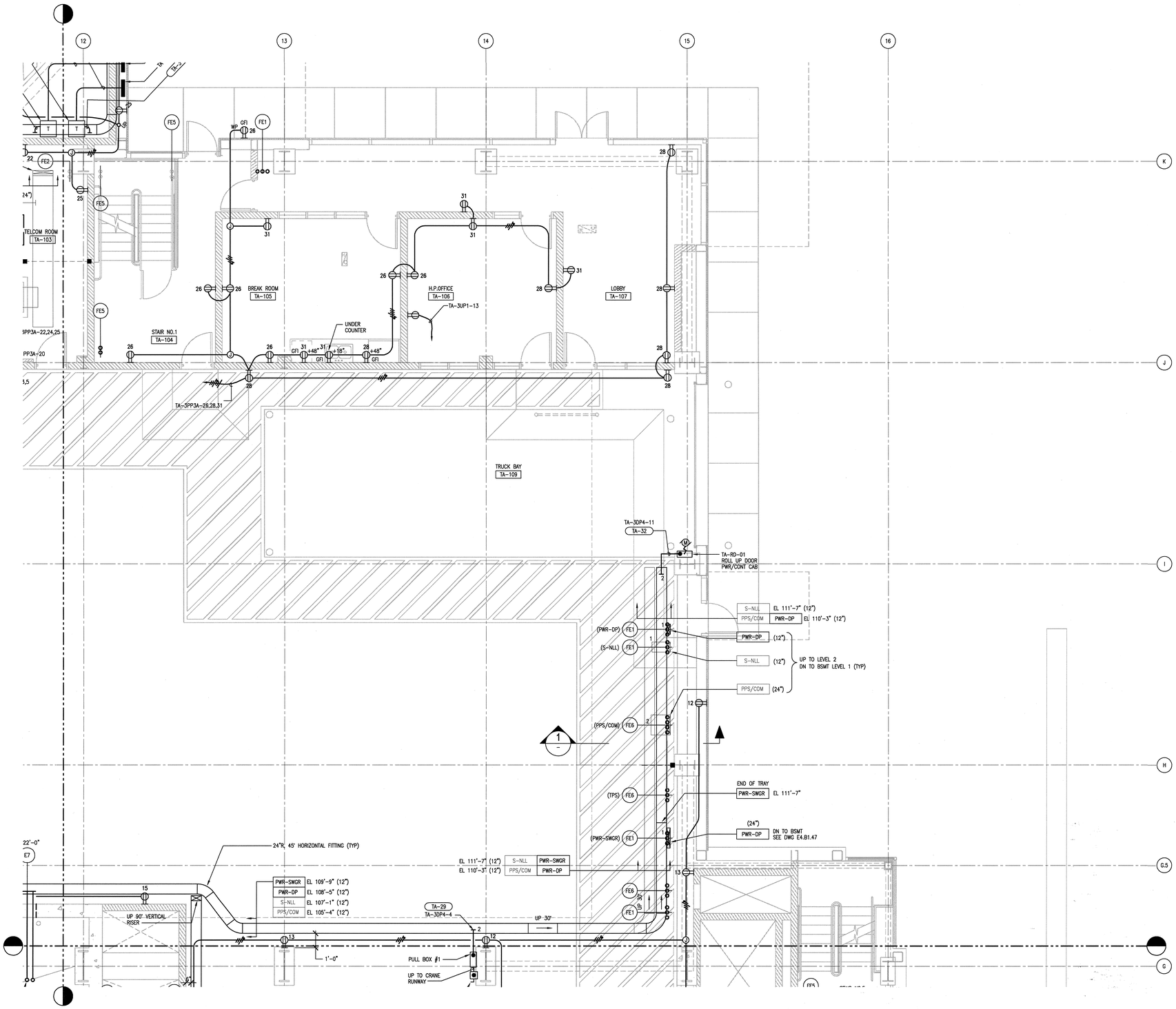

GENERAL NOTES:

1. SEE DWG E8.10.30, E8.10.31, E8.10.32 & E8.10.33 FOR MCC SCHEDULES, E2.10.30, E2.10.31, E2.10.32 FOR SINGLE LINES DIAGRAM AND E9.21.30 THRU 37 FOR PANEL SCHEDULES.
2. CONDUIT ADJACENT OR CONDUIT TO CABLE TRAY #1, #2 OR #3, ETC.
   "X" – DENOTES CABLE TRAY LAYER
   #1 – TOP LAYER TRAY
   #2 – SECOND LAYER TRAY
   #3 – THIRD LAYER TRAY
3. ALL TRAYS ARE LADDER TYPE. PROVIDE VENTILATED TRAY COVER AT VERTICAL RISER TRAY.
4. SEE DWG H9.10.30 & H9.30.31 FOR HVAC SCHEDULES.
5. (TA-XX) SYMBOL DENOTES FEEDER TAG NO. SEE DWG E9.40.30 FOR FEEDER/CONDUIT SIZES.
6. (E-) SYMBOL DENOTES WALL AND FLOOR PENETRATION. REFER TO DWG E9.40.30 FOR PENERATION SEHEDULE.
7. SYMBOL DENOTES CONDUIT/CABLE TRAY SUPPORT FROM WALL/CEILING, REFER TO DETAILS 13, 14, 15 26, 35 & 43
   NOT ALL SUPPORTS ARE SHOWN. THIS DESIGNATION ONLY SHOWS THE CONCEPT TO BE USED BY THE CONTRACTOR TO DESIGN AND PROVIDE CABLE TRAY SUPPORTS.

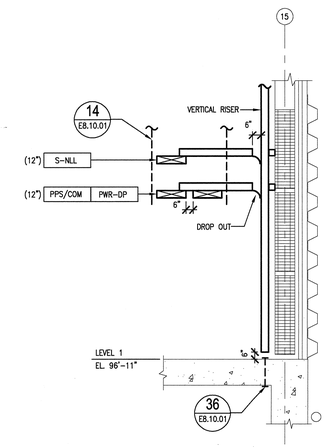

1 SECTION
NONE

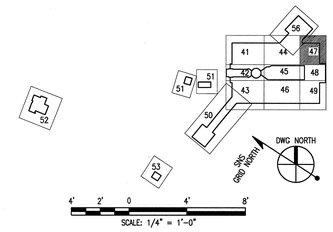

108030700-E8E-8700-A052

Knight/Jacobs Joint Venture
701 Scarboro Road, MS 8253
Oak Ridge, TN 37830
865-241-9433
fax 865-241-3400

KNIGHT
Knight Advanced Technology
540 West Randolph Street
Chicago, IL 60661

UT-BATTELLE
Oak Ridge National Laboratory
managed for the DEPARTMENT OF ENERGY under U.S. GOVERNMENT contract DE-AC05-00OR22725
UT-BATTELLE, LLC. • Oak Ridge, Tennessee

PROJECT NAME:
SPALLATION NEUTRON SOURCE
TARGET BUILDING
ELECTRICAL POWER PLAN
LEVEL 1, SECTOR 47

1	48	49	50	PLANT	BLDG	FL	SH.	OF	TYPE	CLASS
3	E	X	X	8	8700		1	1	P	U
51		52		53	WBS					REV
NC		NA			1.8.3.7		E4.01.47			0

DSN	H GROVER	10/26/01
DRW	L. MAKOVSKY	10/26/01
CHK	V.STEFFEN	10/26/01
DEPT		
PE		11/14/01
PJ		11/14/01
REQ		
UTB		11/14/01

REV 0 DATE 11-13-01

REV	CHANGE TYPE	CHANGE CONTROL SYSTEM	DRAWING REVISION NUMBER	DESCRIPTION	DSN	CHK	DEPT	DATE	PE	DATE	PJ	DATE	REQ	DATE	UTB	DATE	RPE	RPE NO	DATE	ST	CV	EC	EE	EM	IE	M	PD	SE	AR
0				CERTIFIED FOR CONSTRUCTION – 10/26/01	HG	VGS				11/14/01	RPD	11/14/01				11/14/01	VGS	00106009	10/26/01	REW	–	WRS	AK	WRS	BWJ	–	MP	–	ED

REVISION OR ISSUE PURPOSE — REVISION APPROVALS — SQUAD CHECK

NO REPRESENTATION OR WARRANTY, EXPRESSED OR IMPLIED, IS MADE AS TO THE ACCURACY, COMPLETENESS OR USEFULNESS OF THE INFORMATION OR STATEMENTS CONTAINED IN THESE DRAWINGS, OR THAT THE USE OR DISCLOSURE OF ANY INFORMATION, APPARATUS, METHOD, OR PROCESS DISCLOSED IN THESE DRAWINGS MAY NOT INFRINGE PRIVATE RIGHTS OF OTHERS. NO LIABILITY IS ASSUMED WITH RESPECT TO THE USE OF, OR FOR DAMAGES RESULTING FROM THE USE OF ANY INFORMATION, APPARATUS, METHOD, OR PROCESS DISCLOSED IN THESE DRAWINGS. DRAWINGS MADE AVAILABLE FOR INFORMATION TO BIDDER ARE NOT TO BE USED FOR OTHER PURPOSES AND ARE TO BE RETURNED UPON REQUEST OF THE FORWARDING CONTRACTOR.

NUMBER OF SECTION OR DETAIL
DRAWING ON WHICH SECTION OR DETAIL IS SHOWN OR TAKEN
SECTION AND DETAIL KEY

THIS DOCUMENT CONTROLLED BY
CHANGE CONTROL SYSTEM 3
ENGINEERING PROCEDURE SNS-ENG-0001

Date: 11/13/2001 Time: 10:05:52
AutoCAD