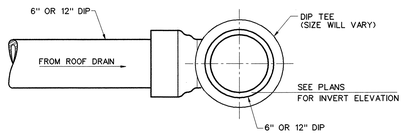

A C3.38.01 **ROOF DRAIN LATERAL CONNECTION SECTION**
NTS

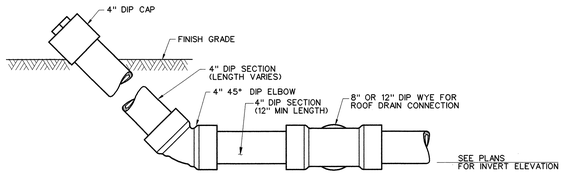

B C3.38.01 **ROOF DRAIN LATERAL CLEANOUT SECTION**
NTS

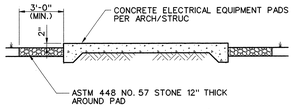

C -- **TYPICAL ELECTRICAL EQUIPMENT PAD PERIMETER PROTECTION**
NTS

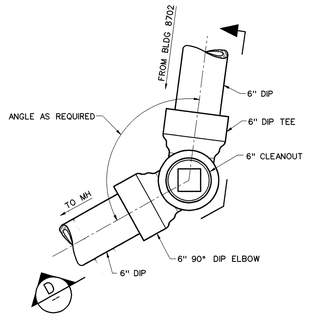

3 C3.38.01 **ROOF DRAIN VERTICAL CLEANOUT DETAIL**
NTS

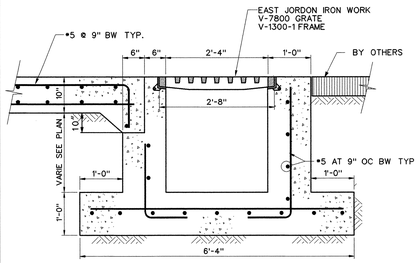

NOTE:

1. CONCRETE SHALL HAVE A MINIMUM COMPRESSIVE STRENGTH OF 4000 PSI.

1 -- **TRENCH DRAIN DETAIL**
NTS

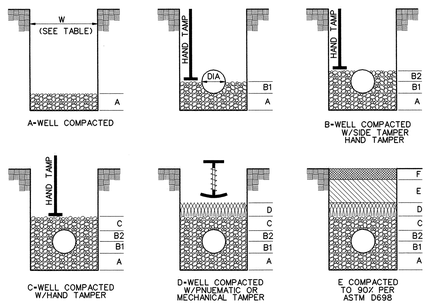

BEDDING AND BACKFILL FOR HDPE PIPE		
LAYER	DEPTH	MATERIAL
A	6"	NO. 57 CRUSHED STONE
B1	DIA/2	NO. 57 CRUSHED STONE
B2	DIA/2	NO. 57 CRUSHED STONE
C	12"	NO. 57 CRUSHED STONE
D	VARIES	SILT, SILTY CLAYS AND CLAYS, INCLUDING INORGANIC CLAYS AND SILTS OF MEDIUM TO HIGH PLASTICITY AND LIQUID LIMITS
E	VARIES	SILT, SILTY CLQAYS AND CLAYS, INCLUDING INORGANIC CLAYS AND SILTS OF MEDIUM TO HIGH PLASTICITY AND LIQUID LIMITS
F	VARIES	TOPSOIL OR PAVEMENT

TRENCH WIDTH FOR HDPE AND CMP PIPE		
DIAMETER	OUTSIDE DIA (IN)	W (IN)
4"	4.72	21
6"	6.95	23
8"	9.16	25
10"	11.31	28
12"	14.45	31
15"	17.65	34
18"	21.10	39
24"	28.30	48
30"	36.10	66
36"	42.25	78
42"	47.00	83
48"	53.00	89

NOTE:

1. PIPES UNDER PAVED AREAS WHERE DEPTH OF COVER IS 6 FEET OR LESS SHALL BE BACKFILLED WITH NO 57 CRUSHED STONE TO PAVEMENT SUBGRADE.

2 -- **TRENCH, BEDDING & BACKFILL FOR HDPE AND CMP PIPE**
NTS

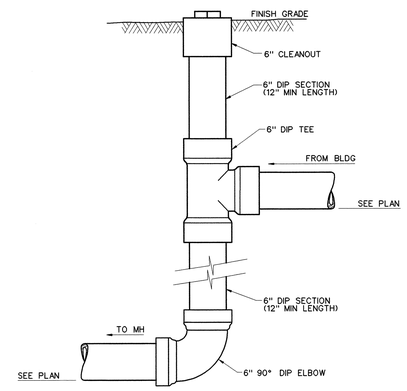

D -- **ROOF DRAIN VERTICAL CLEANOUT SECTION**
NTS

NO REPRESENTATION OR WARRANTY, EXPRESSED OR IMPLIED, IS MADE AS TO THE ACCURACY, COMPLETENESS OR USEFULNESS OF THE INFORMATION OR STATEMENTS CONTAINED IN THESE DRAWINGS, OR THAT THE USE OR DISCLOSURE OF ANY INFORMATION, APPARATUS, METHOD, OR PROCESS DISCLOSED IN THESE DRAWINGS MAY NOT INFRINGE PRIVATE RIGHTS OF OTHERS. NO LIABILITY IS ASSUMED WITH RESPECT TO THE USE OF, OR FOR DAMAGES RESULTING FROM THE USE OF ANY INFORMATION, APPARATUS, METHOD, OR PROCESS DISCLOSED IN THESE DRAWINGS. DRAWINGS MADE AVALABLE FOR INFORMATION TO BIDDER ARE NOT TO BE USED FOR OTHER PURPOSES AND ARE TO BE RETURNED UPON REQUEST OF THE FORWARDING CONTRACTOR.

NUMBER OF SECTION OR DETAIL — DRAWING ON WHICH SECTION OR DETAIL IS SHOWN OR TAKEN
SECTION AND DETAIL KEY

THIS DOCUMENT CONTROLLED BY
CHANGE CONTROL SYSTEM 4
ENGINEERING PROCEDURE SNS-ENG-G001

REV	CHANGE TYPE	CHANGE CONTROL SYSTEM	CHANGE REQUEST NUMBER	DESCRIPTION (REVISION OR ISSUE PURPOSE)	DSN	CHK	DEPT	DATE	PE	DATE	PJ	DATE	REQ	DATE	UTB	DATE	RPE	RPE NO	DATE	ST	CV	EC	EE	EM	IE	M	PD	SE	AR
0				CERTIFIED FOR CONSTRUCTION - 10/26/2001	BCN	ANW		11/13/01		11/13/01	RPD	11/13/01				11/13/01	BCN	104112	10/26	REW	ANW	WRS	AK	WRS	BWJ		MP		ED

REVISION APPROVALS — SQUAD CHECK

RPE: BENJAMIN C. NEMEC, REGISTERED PROFESSIONAL ENGINEER, NO. 104112, STATE OF TENNESSEE

DSGN	B. NEMEC	10/26/01
DRW	K. LYNCH	10/26/01
CHKR	A. WYLIE	10/26/01
SECT		
DEPT		
PE		11/13/01
PJ		11/13/01
REQ		
REV. 0 DATE 10/26/01	UTB	11/13/01

DRAWING APPROVALS

108030700-C8E-8700-A006

Knight/Jacobs — Knight/Jacobs Joint Venture, 701 Scarboro Road, MS 8253, Oak Ridge, TN 37830, 865-241-9433, fax 865-241-3400

BWSC — Barge Waggoner Sumner & Cannon, Inc. — Engineers Architects Planners; Landscape Architects and Surveyors

UT-BATTELLE — Oak Ridge National Laboratory, managed for the DEPARTMENT OF ENERGY under U.S. GOVERNMENT contract DE-AC05-000R22725, UT-BATTELLE, LLC. • Oak Ridge, Tennessee

PROJECT NAME: SPALLATION NEUTRON SOURCE

TARGET BUILDING SECTIONS AND DETAILS

1	48	49	50	PLANT	BLDG	FL	SH.	OF	TYPE	CLASS
3	C	X	X	8	8000	X	1	1	P	U

51	52	53	WBS	DRAWING NUMBER	REV
NC	NA	IN	1.8.2	C4.38.01	0

10/25/01 05:15:58 PM
J:\700_CADD\TASK_01\TASK_01_38\740_Plot\c4_38_01.dgn