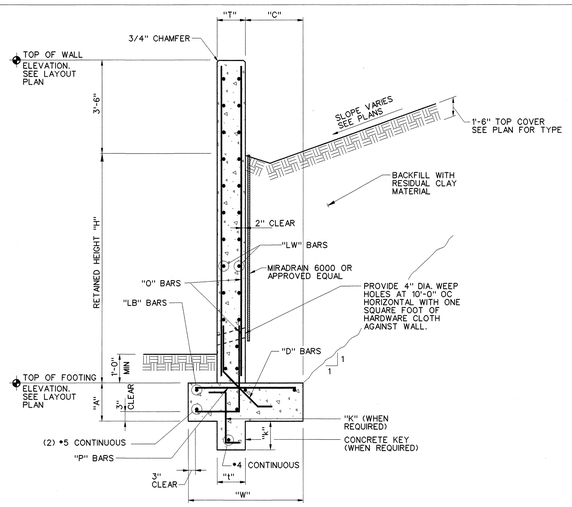

BACKFILL : 3:1						SOIL : EQUIVALENT FLUID PRESSURE 42 POUNDS PER CUBIC FOOT (PC-2)					
"H"	"A"	"T"	"C"	"W"	KEY "t" x "k"	"O"	"D"	"K"	"LB"	"P"	"LW"
<4'-0"	16"	15"	1'-9"	4'-0"	NONE	#4 AT 12"	#4 AT 12"	NONE	(4) #5	#4 AT 12"	#4 AT 16"
6'-0"	16"	15"	2'-9"	5'-6"	NONE	#5 AT 12"	#5 AT 12"	NONE	(5) #5	#4 AT 12"	#4 AT 16"
8'-0"	16"	15"	4'-3"	7'-0"	NONE	#6 AT 10"	#5 AT 10"	NONE	(7) #5	#5 AT 10"	#4 AT 16"
10'-0"	18"	15"	5'-9"	9'-0"	NONE	#7 AT 8"	#6 AT 8"	NONE	(9) #5	#6 AT 8"	#4 AT 16"
12'-0"	20"	16"*	6'-9"	11'-0"	NONE	#8 AT 6"	#6 AT 6"	NONE	(11) #5	#6 AT 6"	#4 AT 16"
14'-0"	22"	18"*	7'-9"	13'-0"	NONE	#9 AT 6"	#7 AT 6"	NONE	(13) #5	#7 AT 6"	#4 AT 16"

* WALL SHALL STEP BACK TO 15" THICK AT 4' ABOVE FOOTING

A / C1.48.01 **RETAINING WALL SECTION**
NTS

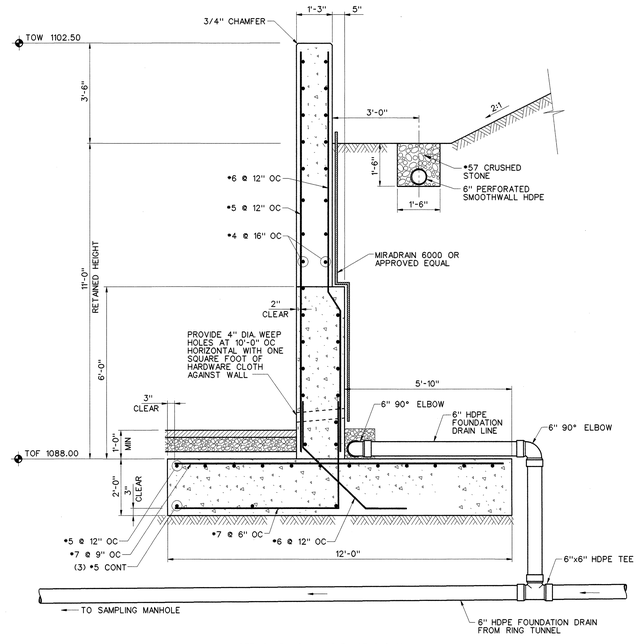

NOTE: SAMPLING MANHOLE NOT SHOWN

B / C1.48.01 **RETAINING WALL SECTION**
NTS

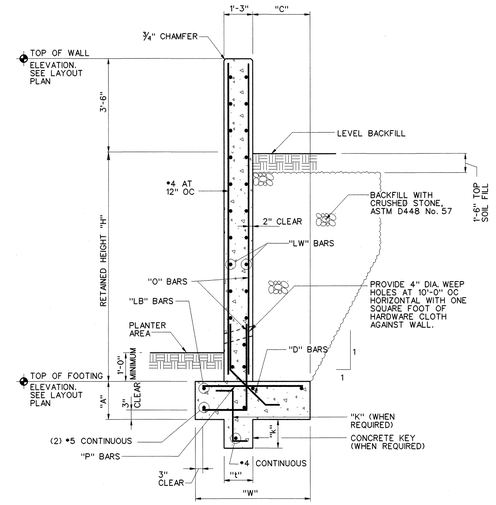

BACKFILL : LEVEL						SOIL : EQUIVALENT FLUID PRESSURE 35 POUNDS PER CUBIC FOOT (PC-2)					
"H"	"A"	"C"	"W"	KEY "t" x "k"	"O"	"D"	"K"	"LB"	"P"	"LW"	
<4'-0"	16"	1'-6"	3'-6"	NONE	#4 AT 12"	#4 AT 12"	NONE	(3) #5	#4 AT 12"	#4 AT 16"	
6'-0"	16"	2'-0"	4'-6"	NONE	#4 AT 12"	#5 AT 12"	NONE	(4) #5	#4 AT 12"	#4 AT 16"	
8'-0"	16"	3'-0"	5'-6"	NONE	#6 AT 12"	#5 AT 12"	NONE	(5) #5	#5 AT 12"	#4 AT 16"	
10'-0"	16"	4'-0"	7'-0"	NONE	#6 AT 12"	#6 AT 12"	NONE	(6) #5	#6 AT 12"	#4 AT 16"	
12'-0"	16"	5'-0"	8'-0"	NONE	#6 AT 6"	#6 AT 12"	NONE	(7) #5	#6 AT 6"	#4 AT 16"	

C / C1.48.01 **RETAINING WALL SECTION**
NTS

NOTES :

1. SEE DRAWING C0.48.01 FOR GENERAL NOTES AND LEGEND.
2. SEE DRAWING S0.10.30 FOR STRUCTURAL NOTES.

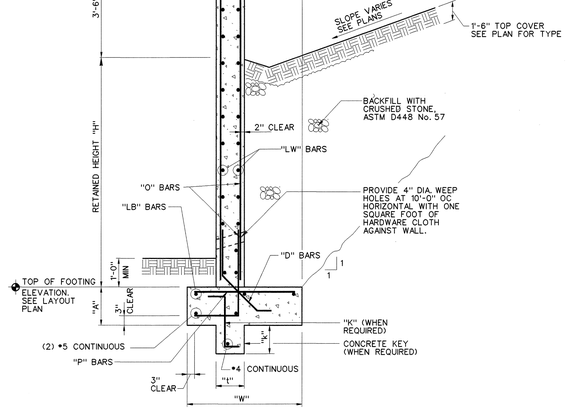

BACKFILL : 3:1						SOIL : EQUIVALENT FLUID PRESSURE 35 POUNDS PER CUBIC FOOT (PC-2)					
"H"	"A"	"T"	"C"	"W"	KEY "t" x "k"	"O"	"D"	"K"	"LB"	"P"	"LW"
<4'-0"	16"	15"	1'-9"	4'-0"	NONE	#4 AT 12"	#4 AT 12"	NONE	(4) #5	#4 AT 12"	#4 AT 16"
6'-0"	16"	15"	2'-9"	5'-6"	NONE	#5 AT 12"	#5 AT 12"	NONE	(5) #5	#4 AT 12"	#4 AT 16"
8'-0"	16"	15"	4'-3"	7'-0"	NONE	#6 AT 10"	#5 AT 10"	NONE	(7) #5	#5 AT 10"	#4 AT 16"
10'-0"	18"	15"	5'-9"	9'-0"	NONE	#7 AT 8"	#6 AT 8"	NONE	(9) #5	#6 AT 8"	#4 AT 16"

NOTE: WALL SHALL STEP BACK TO 16" THICK AT 6" BELOW FINISH GRADE.

D / C1.48.01 **RETAINING WALL SECTION**
NTS

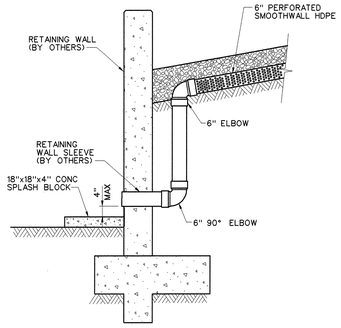

E / C1.48.01 **TRENCH DRAIN SECTION**
NTS

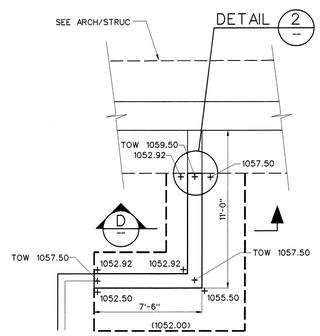

1 / C1.48.01 **WALL DETAIL**
NTS

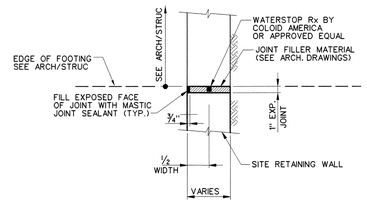

2 / C1.48.01 **WALL JOINT DETAIL**
NTS

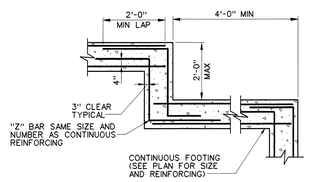

3 / - **TYPICAL STEP FOOTING DETAIL**
NTS

NO REPRESENTATION OR WARRANTY, EXPRESSED OR IMPLIED, IS MADE AS TO THE ACCURACY, COMPLETENESS OR USEFULNESS OF THE INFORMATION OR STATEMENTS CONTAINED IN THESE DRAWINGS, OR THAT THE USE OR DISCLOSURE OF ANY INFORMATION, APPARATUS, METHOD, OR PROCESS DISCLOSED IN THESE DRAWINGS MAY NOT INFRINGE PRIVATE RIGHTS OF OTHERS. NO LIABILITY IS ASSUMED WITH RESPECT TO THE USE OF, OR FOR DAMAGES RESULTING FROM THE USE OF ANY INFORMATION, APPARATUS, METHOD, OR PROCESS DISCLOSED IN THESE DRAWINGS. DRAWINGS MADE AVAILABLE FOR INFORMATION TO BIDDER ARE NOT TO BE USED FOR OTHER PURPOSES AND ARE TO BE RETURNED UPON REQUEST OF THE FORWARDING CONTRACTOR.

NUMBER OF SECTION OR DETAIL
DRAWING ON WHICH SECTION OR DETAIL IS SHOWN OR TAKEN
SECTION AND DETAIL KEY

THIS DOCUMENT CONTROLLED BY
CHANGE CONTROL SYSTEM 4
ENGINEERING PROCEDURE SNS-ENG-G001

REV	CHANGE TYPE	CHANGE CONTROL SYSTEM	CHANGE REQUEST NUMBER	DESCRIPTION	DSN	CHK	DEPT	DATE	PE	DATE	PJ	DATE	REQ	DATE	UTB	DATE	RPE	RPE NO	DATE	ST	CV	EC	EE	EM	IE	M	PD	SE	AR
0				CERTIFIED FOR CONSTRUCTION - 10/26/2001	BCN	ANW				11/5/01	RBD	11/14/01				11/16/01	BM	19600	11/13	REW	ANW	WRS	AK	WRS	BWJ		MP		ED
				REVISION OR ISSUE PURPOSE				REVISION APPROVALS												SQUAD CHECK									

RPE: BRIAN KETRON MAHONEY, REGISTERED PROFESSIONAL ENGINEER, AGRICULTURE, NO. 19600, STATE OF TENNESSEE, 11-13-01

REV. 0 DATE 10-26-01

DSGN	B. MAHONEY	10/26/01
DRW	K. LYNCH	10/26/01
CHKR	A. WYLIE	10/26/01
SECT		
DEPT		
PE		11/5/01
PJ		11/14/01
REQ		
UTB		11/16/01

DRAWING APPROVALS

108030700-C8E-8700-A008

Knight / Jacobs SNS
Knight/Jacobs Joint Venture
701 Scarboro Road, MS 8253
Oak Ridge, TN 37830
865-241-9433
fax 865-241-3400

BWSC Barge Waggoner Sumner & Cannon, Inc.
ENGINEERS ARCHITECTS PLANNERS LANDSCAPE ARCHITECTS AND SURVEYORS
655 Commerce Park Drive Suite 100,Oak Ridge, Tennessee 37830
Phone (865) 482-1998 Fax (865) 482-0285

UT-BATTELLE
Oak Ridge National Laboratory
managed for the DEPARTMENT OF ENERGY under U.S. GOVERNMENT contract DE-AC05-000R22725
UT-BATTELLE, LLC. • Oak Ridge, Tennessee

PROJECT NAME:
SPALLATION NEUTRON SOURCE

LAND IMPROVEMENTS
RETAINING WALL SECTIONS AND DETAILS

1	48	49	50	PLANT	BLDG	FL	SH.	OF	TYPE	CLASS
3	C	X	X	8	8700	X	1	1	S	U
51		52		53	WBS	DRAWING NUMBER				REV
NC		NA		IN	1.8.2	C2.48.01				0

11/14/01 10:44:26 AM
J:\700_CADD\TASK_01_48\740_Plot\c2_48_01.dgn