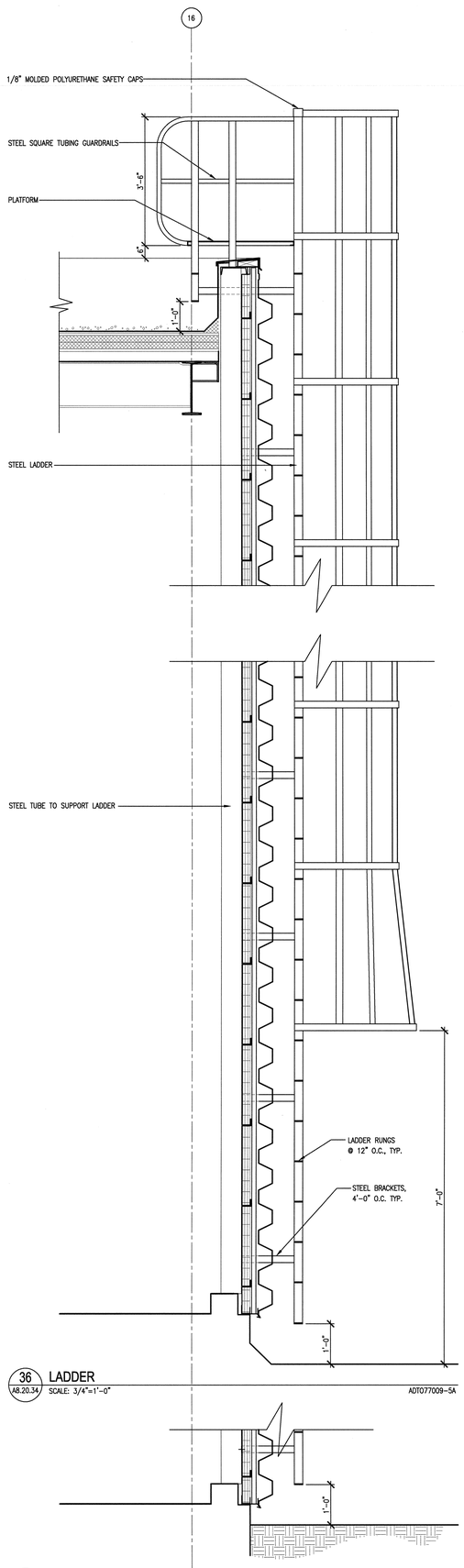

36 A8.20.34 LADDER
SCALE: 3/4"=1'-0" ADT077009-5A

37 A8.20.34 LADDER @ GROUND
SCALE: 3/4"=1'-0" ADT077009-5A

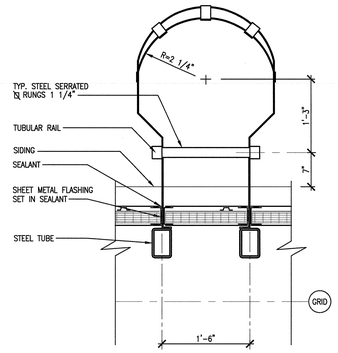

27 A1.09.30 SAFETY LADDER PLAN VIEW
SCALE: 1"=1'-0" ADT077007-5A

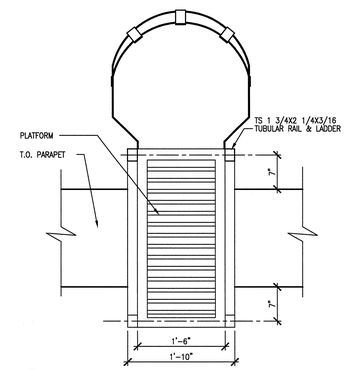

28 A1.09.30 SAFETY LADDER PLAN VIEW
SCALE: 1"=1'-0" ADT077008-5A

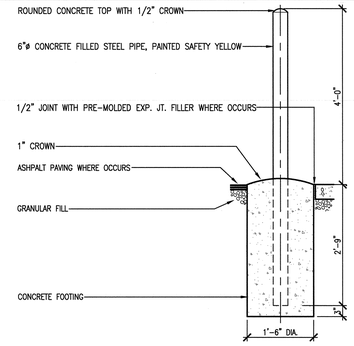

SECTION

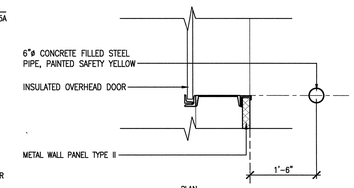

PLAN

23 A8.20.34 EXTERIOR PIPE BOLLARD
SCALE: 3/4"=1'-0" ADT108014-5A

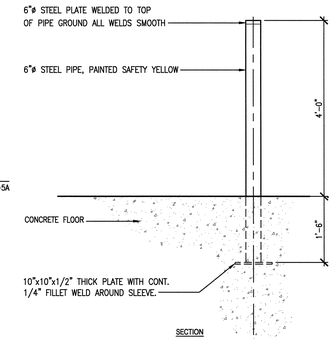

SECTION

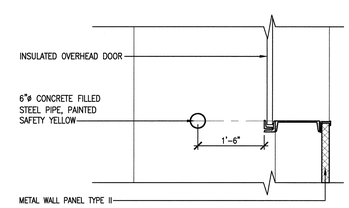

PLAN

24 A8.20.34 INTERIOR PIPE BOLLARD
SCALE: 3/4"=1'-0" ADT108015-5A

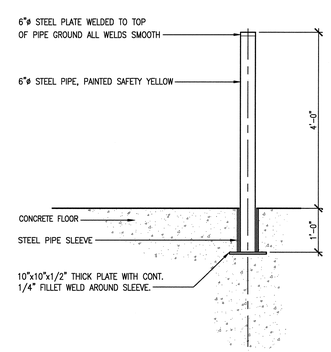

25 A1.09.30 REMOVABLE PIPE BOLLARD
SCALE: 3/4"=1'-0" ADT108016-5A

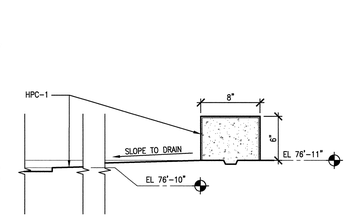

22 A2.B1.48 CURB DETAIL
SCALE: 1 1/2"=1'-0" ADT108011-5A

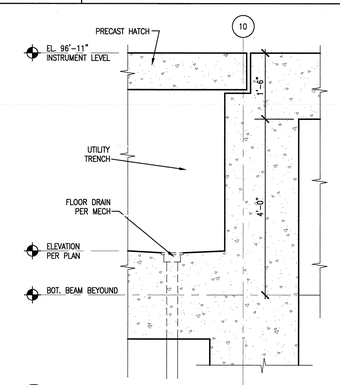

17 A2.01.44 UTILITY TRENCH AT BASEMENT WALL
SCALE: 3/4"=1'-0" AWS020-5A

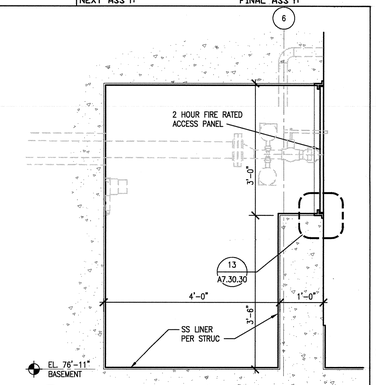

6 A2.B1.42 VAULT AT BULK SHIELDING SHUT OFF VALVE
SCALE: 3/4"=1'-0" AWS022-5A

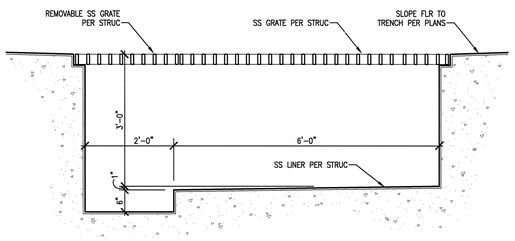

19 A2.B1.45 TRENCH AT CARBON FILTER ROOM
SCALE: 3/4"=1'-0" AWS023-5A

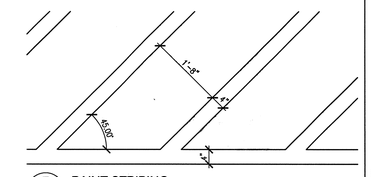

7 A2.01.44 PAINT STRIPING
SCALE: 3/4"=1'-0" AD096031-5A

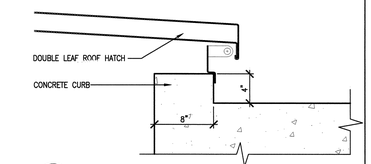

8 A2.03.45 ROOF HATCH @ CONCRETE CURB
SCALE: 1-1/2"=1'-0" AD077010-5A

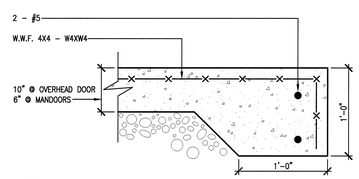

20 A1.A1.30 EXTERIOR STOOP
SCALE 1-1/2" = 1'-0 AD033014-5A

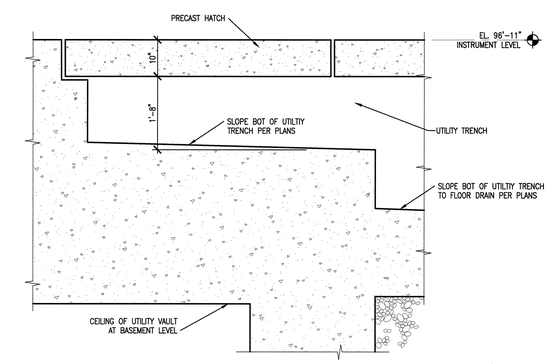

9 A2.01.41 UTILTIY TRENCH AT COOLING LOOP VAULT
SCALE: 3/4"=1'-0" AWS021-5A

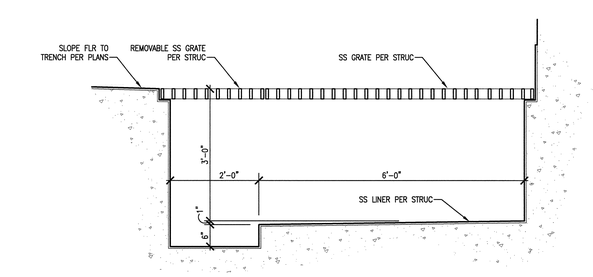

21 A2.B1.49 TRENCH AT PUMP , VALVE & IX VAULT
SCALE: 3/4"=1'-0" AWS024-5A

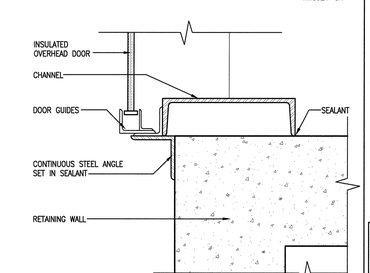

10 A3.10.35 OVERHEAD DR JAMB @ RETAINING WALL
SCALE: 1-1/2"=1'-0" AD074121-5A

NO REPRESENTATION OR WARRANTY, EXPRESSED OR IMPLIED, IS MADE AS TO THE ACCURACY, COMPLETENESS OR USEFULNESS OF THE INFORMATION OR STATEMENTS CONTAINED IN THESE DRAWINGS, OR THAT THE USE OR DISCLOSURE OF ANY INFORMATION, APPARATUS, METHOD, OR PROCESS DISCLOSED IN THESE DRAWINGS MAY NOT INFRINGE PRIVATE RIGHTS OF OTHERS. NO LIABILITY IS ASSUMED WITH RESPECT TO THE USE OF, OR FOR DAMAGES RESULTING FROM THE USE OF ANY INFORMATION, APPARATUS, METHOD, OR PROCESS DISCLOSED IN THESE DRAWINGS. DRAWINGS MADE AVAILABLE FOR INFORMATION TO BIDDER ARE NOT TO BE USED FOR OTHER PURPOSES AND ARE TO BE RETURNED UPON REQUEST OF THE FORWARDING CONTRACTOR.

NUMBER OF SECTION OR DETAIL
DRAWING ON WHICH SECTION OR DETAIL IS SHOWN OR TAKEN
SECTION AND DETAIL KEY

THIS DOCUMENT CONTROLLED BY
CHANGE CONTROL SYSTEM 3
ENGINEERING PROCEDURE SNS-ENG-G001

REV	CHANGE TYPE	CHANGE CONTROL SYSTEM	CHANGE REQUEST NUMBER	DESCRIPTION	DSN	CHK	DEPT
0				CERTIFIED FOR CONSTRUCTION – 10/26/01	MBB	ED	

REVISION OR ISSUE PURPOSE

DATE	PE	DATE	PJ	DATE	REQ	DATE	UTB	DATE	RPE	RPE NO	DATE
11/13/01	RDD	11/14/01						11/14/01	RLB	102104	11/13/01

REVISION APPROVALS

REW	–	WRS	AK	WRS	BWJ	–	MP	–	ED
ST	CV	EC	EE	EM	IE	M	PD	SE	AR

SQUAD CHECK

RPE
ROBERT L. BARNES REGISTERED ARCHITECT No. 102104 STATE OF TENNESSEE
REV. 0 DATE 11-13-01

DSN	M. BRADLEY	10/26/01
DRW	I. WANG	10/26/01
CHK	E.DENSON	10/26/01
DEPT		
PE	RDDenson	11/13/01
PJ	KAdem	11/14/01
REQ		
UTB		11/14/01

DRAWING APPROVALS

108030700-A8E-8700-A086

Knight Jacobs
Knight/Jacobs Joint Venture
701 Scarboro Road, MS 8253
Oak Ridge, TN 37830
865-241-9433
fax 865-241-3400

KNIGHT
Knight Advanced Technology
540 West Randolph Street
Chicago, IL 60661

UT-BATTELLE
Oak Ridge National Laboratory
managed for the DEPARTMENT OF ENERGY under
U.S. GOVERNMENT contract DE-AC05-00OR22725
UT-BATTELLE, LLC. = Oak Ridge, Tennessee

PROJECT NAME:
SPALLATION NEUTRON SOURCE

TARGET BUILDING
TRENCH DETAILS

1	48	49	50	PLANT	BLDG	FL	SH.	OF	TYPE	CLASS
3	A	X	X	8	8700		1	1		U
51		52		53	WBS					REV
NC		NA			1.8.3.7		A8.20.34			0

Date: 11/13/2001 Time: 13:34:43
User name: DENSONRD
CM:/PJ_DATA/PROJECTS/8000/08_CADD/WAA_SA/WAA_PLOT/A8-20-34.DWG

AutoCAD