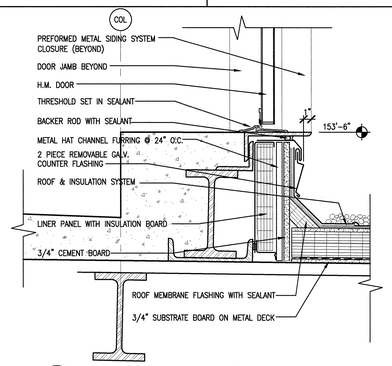

26 SILL DETAIL @ ROOF ACCESS DOOR
A1.09.30 SCALE: 1-1/2"=1'-0" ADT074118-5A

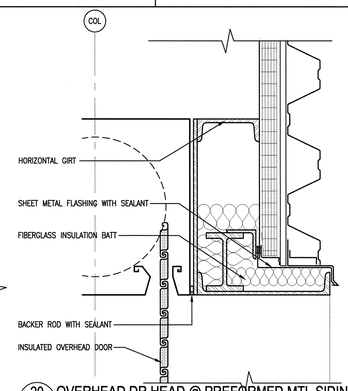

20 OVERHEAD DR HEAD @ PREFORMED MTL SIDING
A8.20.33 SCALE: 1-1/2"=1'-0" ADT074090-5A

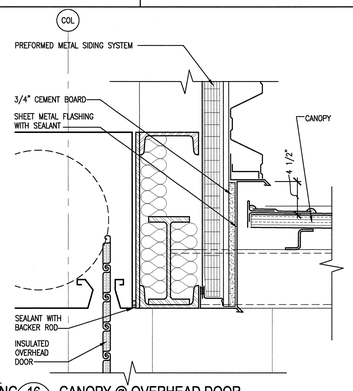

16 CANOPY @ OVERHEAD DOOR
A3.40.32 SCALE: 1-1/2"=1'-0" ADT074122-5A

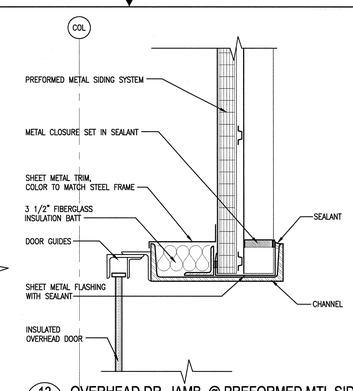

13 OVERHEAD DR JAMB @ PREFORMED MTL SIDING
A3.40.32 SCALE: 1-1/2"=1'-0" ADT074122-5A

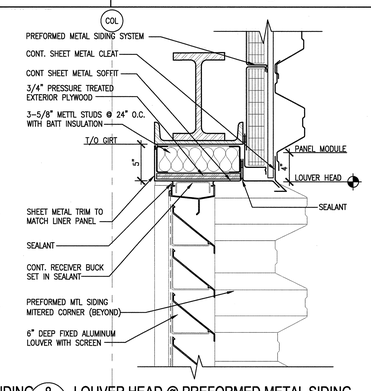

8 LOUVER HEAD @ PREFORMED METAL SIDING
A3.40.30 SCALE: 1-1/2"=1'-0" ADT074105-5A

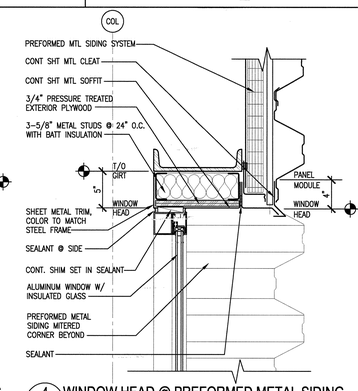

4 WINDOW HEAD @ PREFORMED METAL SIDING
A3.40.30 SCALE: 1-1/2"=1'-0" ADT074100-5A

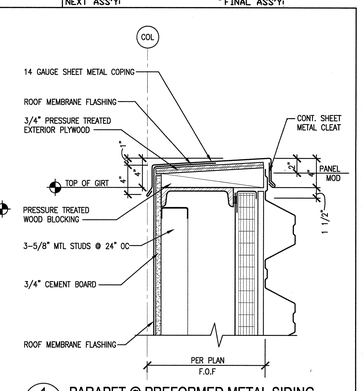

1 PARAPET @ PREFORMED METAL SIDING
A1.09.30 SCALE: 1-1/2"=1'-0" ADT074107-5A

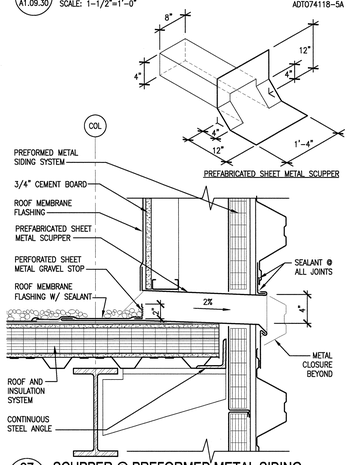

27 SCUPPER @ PREFORMED METAL SIDING
A1.09.30 SCALE: 1-1/2"=1'-0" ADT074025-5A

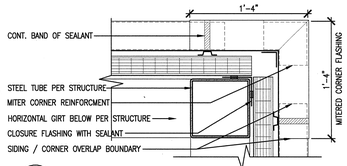

21 CORNER @ PREFORMED METAL SIDING
A3.40.30 SCALE: 1-1/2"=1'-0" ADT074092-5A

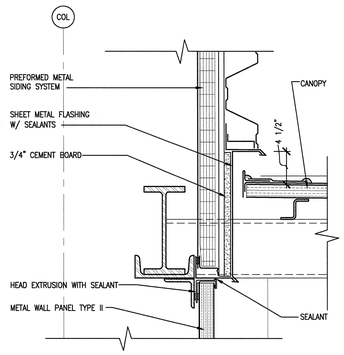

17 CANOPY @ INFILL PANEL
A3.40.32 SCALE: 1-1/2"=1'-0" ADT074122-5A

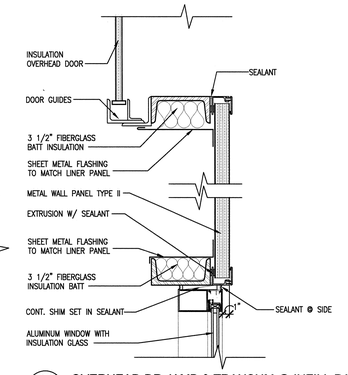

14 OVERHEAD DR JAMB & TRANSUM @ INFILL PANEL
A3.40.32 SCALE: 1-1/2"=1'-0" ADT074122-5A

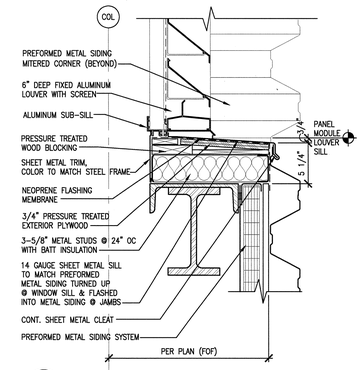

9 LOUVER SILL @ PREFORMED METAL SIDING
A3.40.30 SCALE: 1-1/2"=1'-0" ADT074105-5A

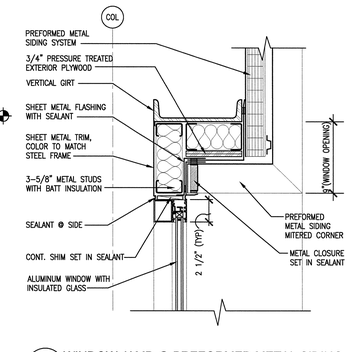

5 WINDOW JAMB @ PREFORMED METAL SIDING
A3.40.30 SCALE: 1-1/2"=1'-0" ADT074100-5A

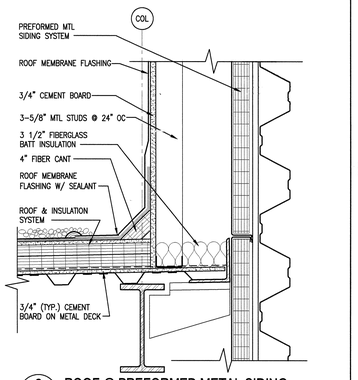

2 ROOF @ PREFORMED METAL SIDING
A1.09.30 SCALE: 1-1/2"=1'-0" ADT074107-5A

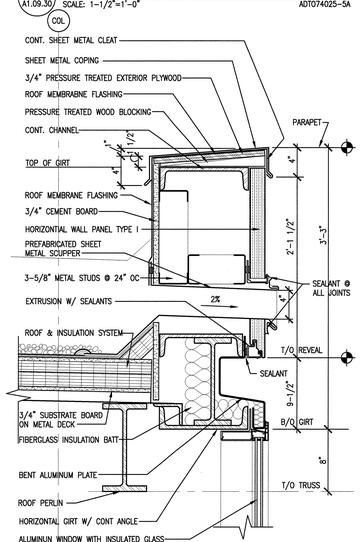

28 SCUPPER @WALL PANEL TYPE II
A1.09.30 SCALE: 1-1/2"=1'-0" ADT074117-5A

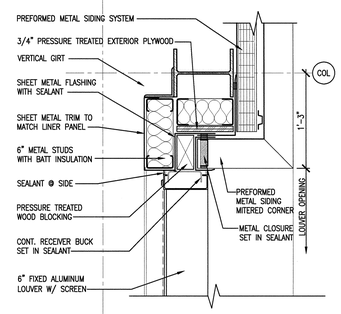

22 LOUVER JAMB @ PREFORMED METAL SIDING
A3.40.30 SCALE: 1-1/2"=1'-0" ADT074092-5A

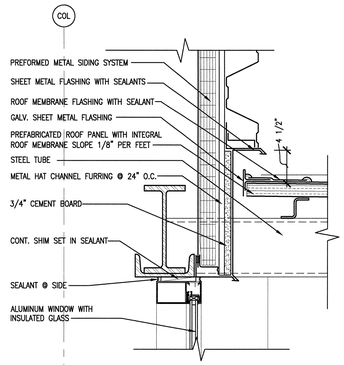

18 CANOPY @ TRANSUM
A3.40.32 SCALE: 1-1/2"=1'-0" ADT074122-5A

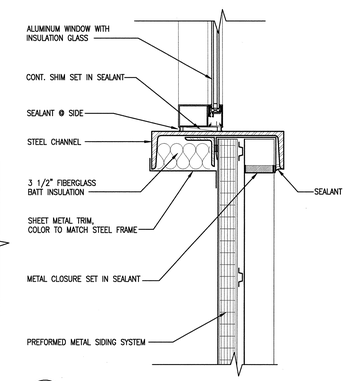

15 TRANSUM @ PREFORMED METAL PANEL
A3.40.32 SCALE: 1-1/2"=1'-0" ADT074122-5A

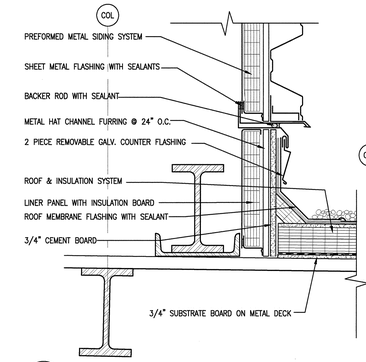

10 PREFORMED METAL SIDING @ ROOF DECK
A1.09.30 SCALE: 1-1/2"=1'-0" ADT074106-5A

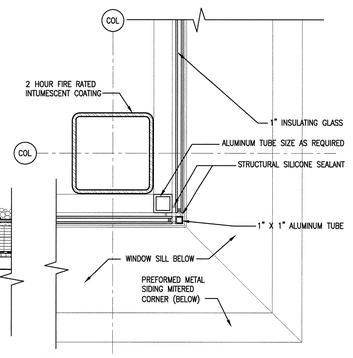

6 WINDOW JAMB @ PREFORMED METAL SIDING
A3.40.30 SCALE: 1-1/2"=1'-0" ADT074100-5A

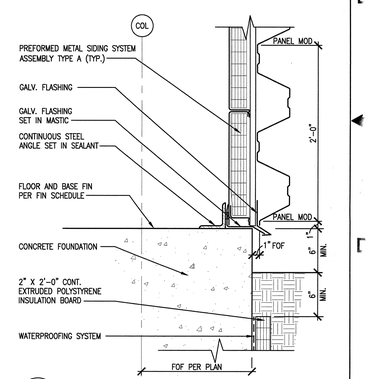

3 PREFORMED METAL SIDING @ BASE
A3.10.35 SCALE: 1-1/2"=1'-0" ADT074108-5A

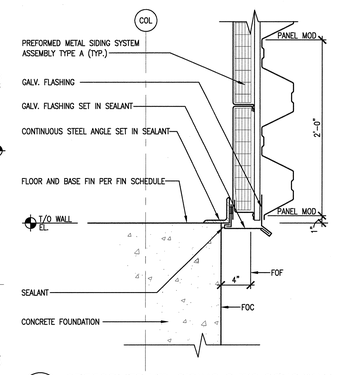

23 PREFORMED MTL SIDING @ T/O CONC WALL
A3.30.30 SCALE: 1-1/2"=1'-0" ADT074101-5A

11 DOOR HEAD @ PREFORMED METAL SIDING
A3.30.36 SCALE: 1-1/2"=1'-0" ADT074103-5A

7 WINDOW SILL @ PREFORMED METAL SIDING
A3.40.30 SCALE: 1-1/2"=1'-0" ADT074100-5A

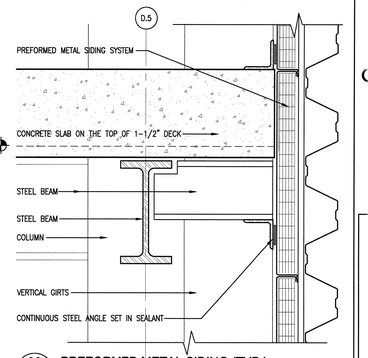

30 PREFORMED METAL SIDING (TYP.)
A5.30.31 SCALE: 1-1/2"=1'-0" ADT074084-5A

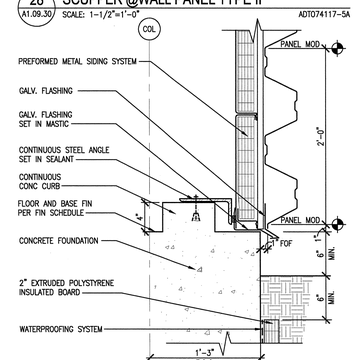

29 PREFORMED METAL SIDING @ BASE
A3.40.30 SCALE: 1-1/2"=1'-0" ADT074089-5A

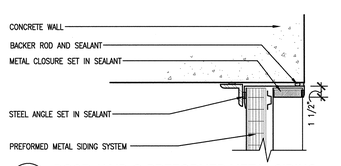

24 DOOR JAMB @ PREFORMED METAL SIDING
A2.02.51 SCALE: 1-1/2"=1'-0" ADT074127-5A

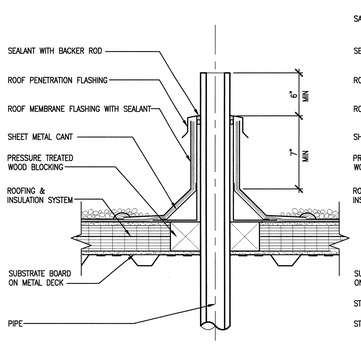

19 PIPE PENETRATION
A1.09.30 SCALE: 1 1/2"=1'-0" ADT077005-5A

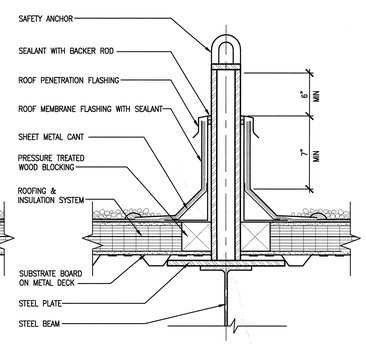

30 SAFETY TIE-BACK
A1.09.30 SCALE: 1 1/2"=1'-0" ADT077006-5A

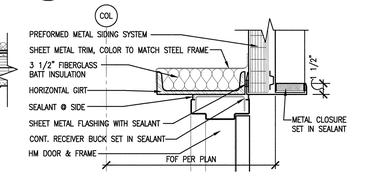

12 DOOR JAMB @ PREFORMED METAL SIDING
A3.30.36 SCALE: 1-1/2"=1'-0" ADT074103-5A

108030700-A8E-8700-A112

Knight Jacobs
Knight/Jacobs Joint Venture
701 Scarboro Road, MS 8253
Oak Ridge, TN 37830
865-241-6433
fax 865-241-3400

KNIGHT
Knight Advanced Technology
549 West Randolph Street
Chicago, IL 60661

UT-BATTELLE
Oak Ridge National Laboratory
managed for the DEPARTMENT OF ENERGY under
U.S. GOVERNMENT contract DE-AC05-00OR22725
UT-BATTELLE, LLC, ≈ Oak Ridge, Tennessee

NO REPRESENTATION OR WARRANTY, EXPRESSED OR IMPLIED, IS MADE AS TO THE ACCURACY, COMPLETENESS OR USEFULNESS OF THE INFORMATION OR STATEMENTS CONTAINED IN THESE DRAWINGS, OR THAT THE USE OR DISCLOSURE OF ANY INFORMATION, APPARATUS, METHOD, OR PROCESS DISCLOSED IN THESE DRAWINGS MAY NOT INFRINGE PRIVATE RIGHTS OF OTHERS. NO LIABILITY IS ASSUMED WITH RESPECT TO THE USE OF, OR FOR DAMAGES RESULTING FROM THE USE OF ANY INFORMATION, APPARATUS, METHOD, OR PROCESS DISCLOSED IN THESE DRAWINGS. DRAWINGS MADE AVAILABLE FOR INFORMATION TO BIDDER ARE NOT TO BE USED FOR OTHER PURPOSES AND ARE TO BE RETURNED UPON REQUEST OF THE FORWARDING CONTRACTOR.

NUMBER OF SECTION OR DETAIL
DRAWING ON WHICH SECTION OR DETAIL IS SHOWN OR TAKEN
SECTION AND DETAIL KEY

THIS DOCUMENT CONTROLLED BY
CHANGE CONTROL SYSTEM 3
ENGINEERING PROCEDURE SNS-ENG-G001

REV	CHANGE TYPE	CHANGE CONTROL SYSTEM	CHANGE ORDER NUMBER	DESCRIPTION	DSN	CHK	DEPT
0				CERTIFIED FOR CONSTRUCTION – 10/26/01	MBB	ED	

REVISION OR ISSUE PURPOSE

DATE	PE	DATE	PJ	DATE	REQ	DATE	UTB	DATE	RPE	RPE NO	DATE
		11/13/01	EAD	11/14/01				11/14/01	RLB	102104	11/13/01

REVISION APPROVALS

REW	–	WRS	AK	WRS	BWJ	–	MP	–	ED
ST	CV	EC	EE	EM	IE	M	PD	SE	AR

SQUAD CHECK

RPE
ROBERT L. BASINGER, REGISTERED ARCHITECT, NO. 102104, STATE OF TENNESSEE
REV. 0 DATE 11-13-01

DSN	M. BRADLEY	10/26/01
DRW	I. WANG	10/26/01
CHK	E.DENSON	10/26/01
DEPT		
PE		11/13/01
PJ		11/14/01
REQ		
UTB		11/14/01

DRAWING APPROVALS

PROJECT NAME:
SPALLATION NEUTRON SOURCE
TARGET BUILDING
ROOF & WALL DETAILS

1	48	49	50	PLANT	BLDG	FL	SH.	OF	TYPE	CLASS
3	A	X	X	8	8700		1	1		U
51		52		53	WBS					REV
NC		NA			1.8.3.7					0

A8.20.33

AutoCAD
Date: 11/13/2001 Time: 13:35:24
Username: BWJW
DN=P_RBJ,PRBADETD,1000/PW_GROUP/ROA_SAF/NO_PLOTFLAG=20:33:24WC