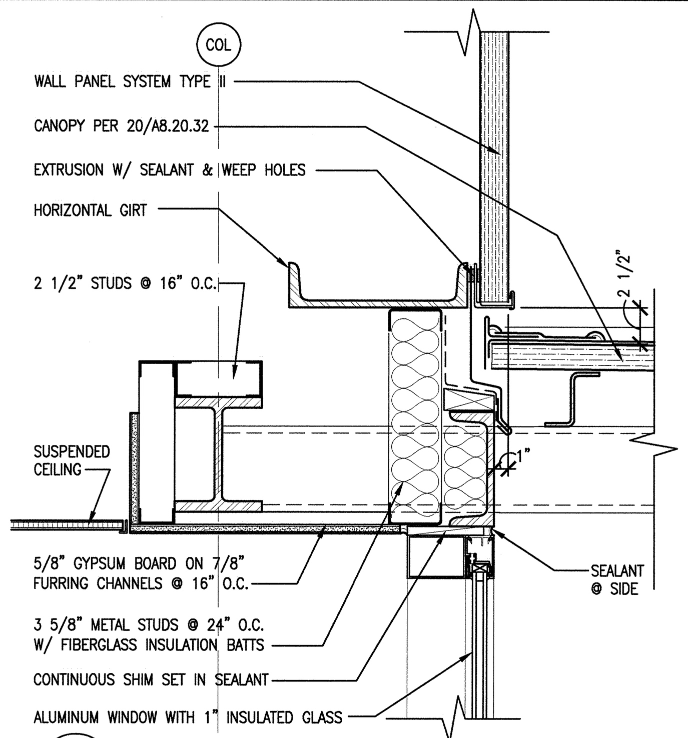

28 WINDOW HEAD
A3.40.31 SCALE: 1-1/2"=1'-0" ADT074026-5A

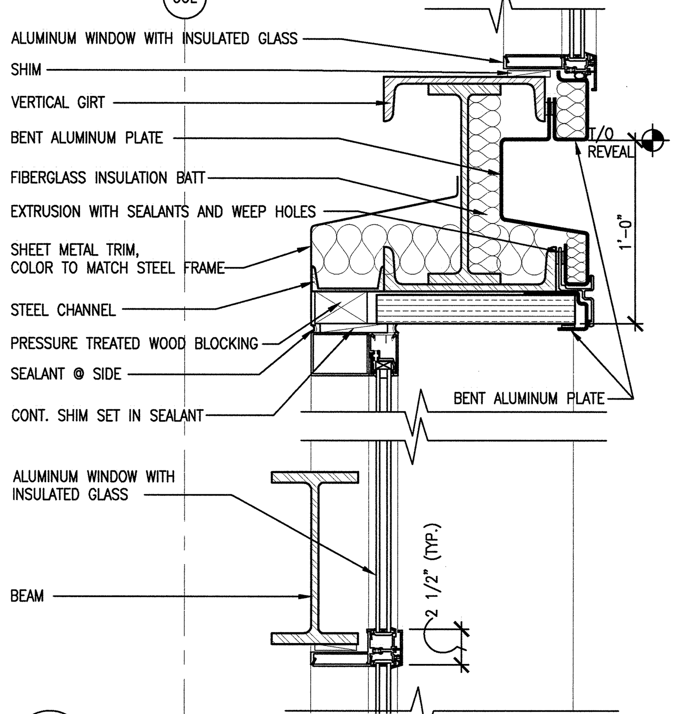

24 WINDOW HEAD
A3.40.31 SCALE: 1-1/2"=1'-0" ADT074093-5A

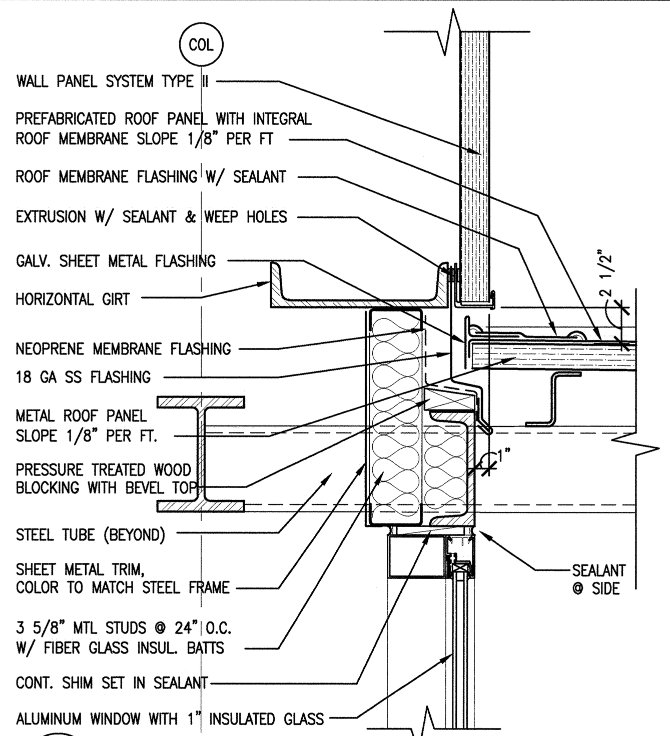

20 CANOPY @ WALL PANEL SYSTEM TYPE 2
A3.40.31 SCALE: 1-1/2"=1'-0" ADT074024-5A

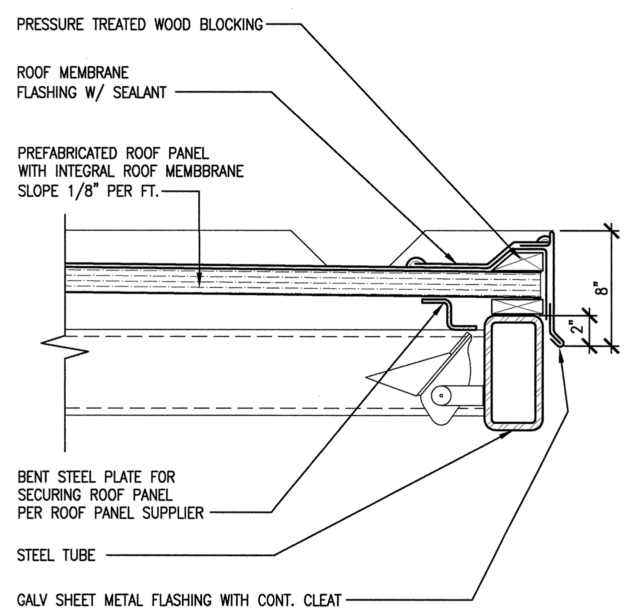

16 CANOPY @ FASCIA
A3.40.31 SCALE: 1-1/2"=1'-0" ADT074024-5A

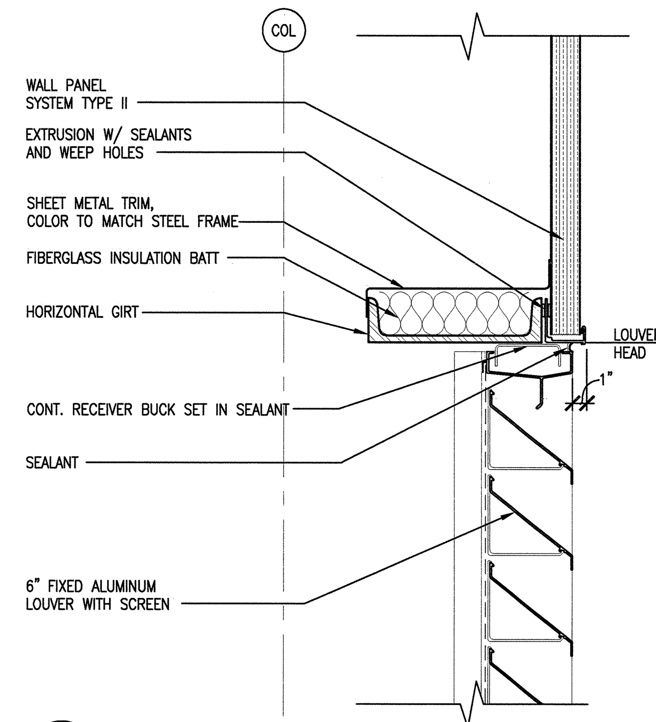

11 LOUVER HEAD @ METAL PANEL TYPE 2
A3.40.31 SCALE: 1-1/2"=1'-0" ADT074059-5A

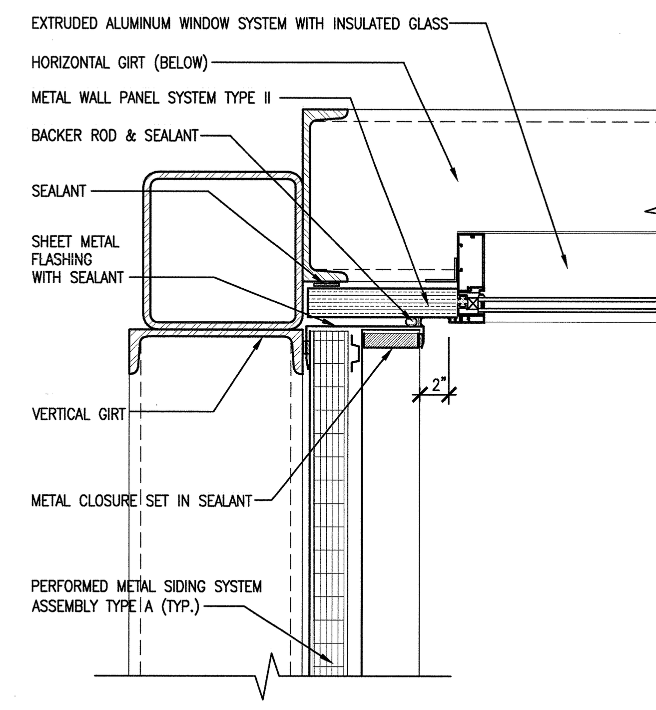

6 WINDOW JAMB @ TRUSS LEVEL
A3.40.30 SCALE: 1-1/2"=1'-0" ADT074054-5A

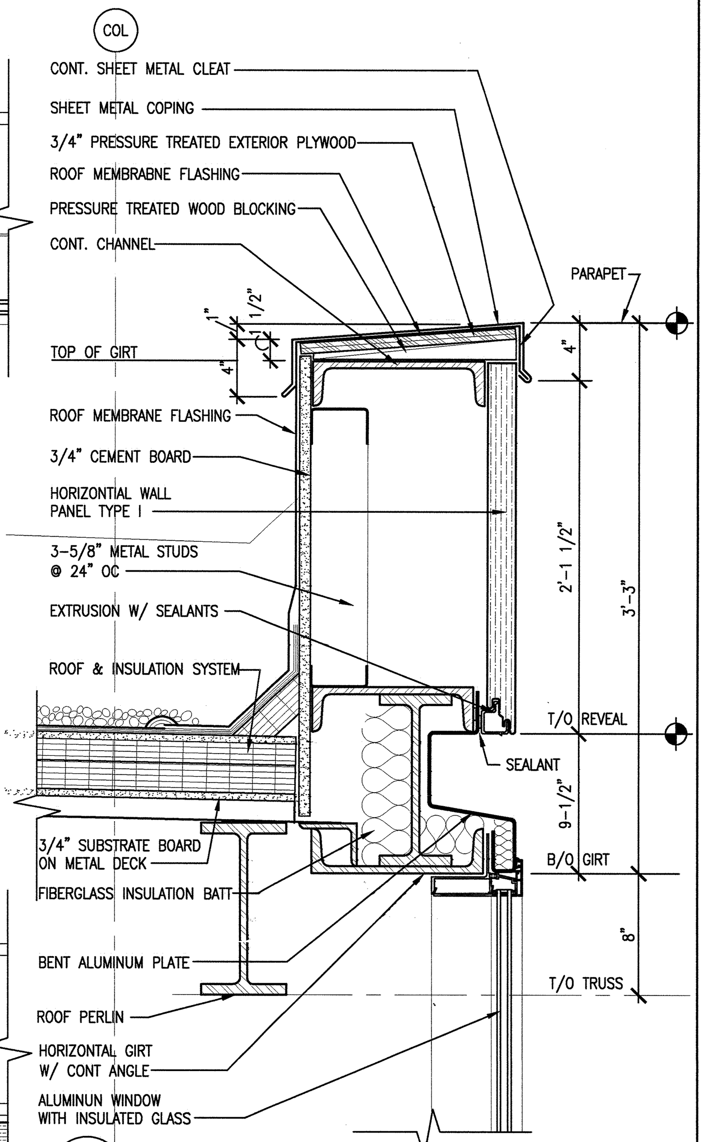

1 WINDOW HEAD AND PARAPET
A1.09.30 SCALE: 1-1/2"=1'-0" ADT074098-5A

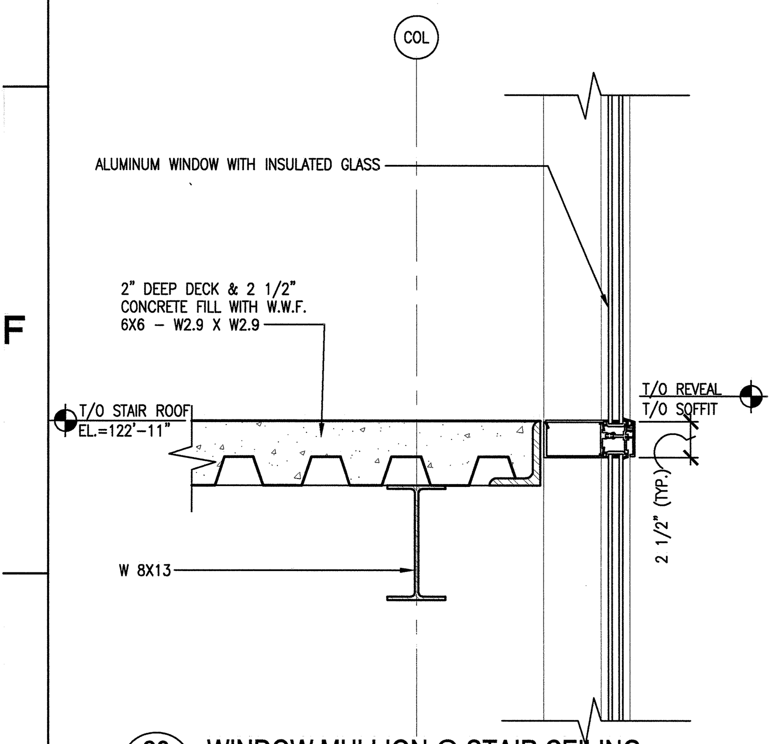

29 WINDOW MULLION @ STAIR CEILING
A5.30.30 SCALE: 1-1/2"=1'-0" ADT074102-5A

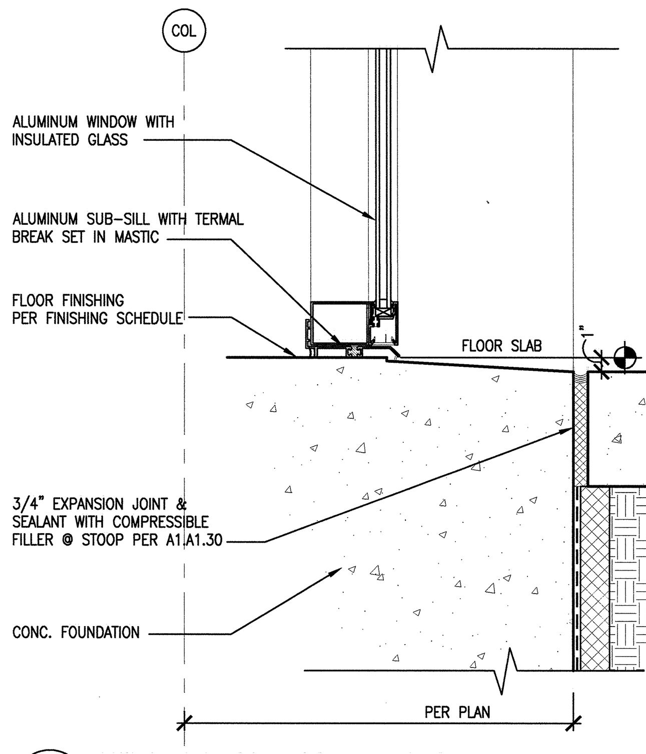

25 WINDOW SILL @ FLOOR SLAB
A3.40.31 SCALE: 1-1/2"=1'-0" ADT074093-5A

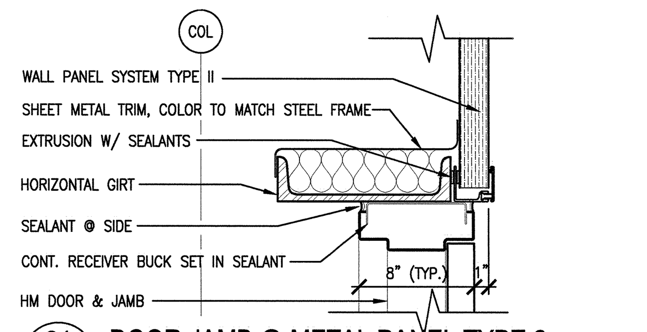

21 DOOR JAMB @ METAL PANEL TYPE 2
A3.40.31 SCALE: 1-1/2"=1'-0" ADT074024-5A

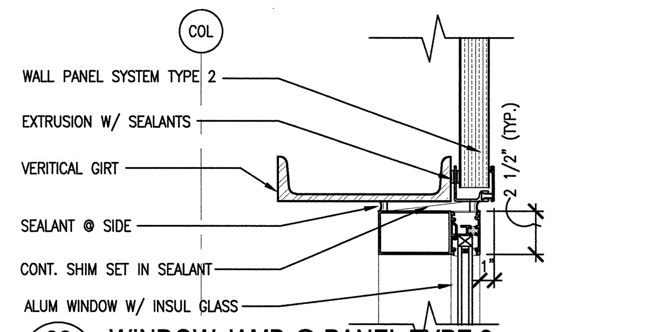

22 WINDOW JAMB @ PANEL TYPE 2
A3.40.31 SCALE: 1-1/2"=1'-0" ADT074094-5A

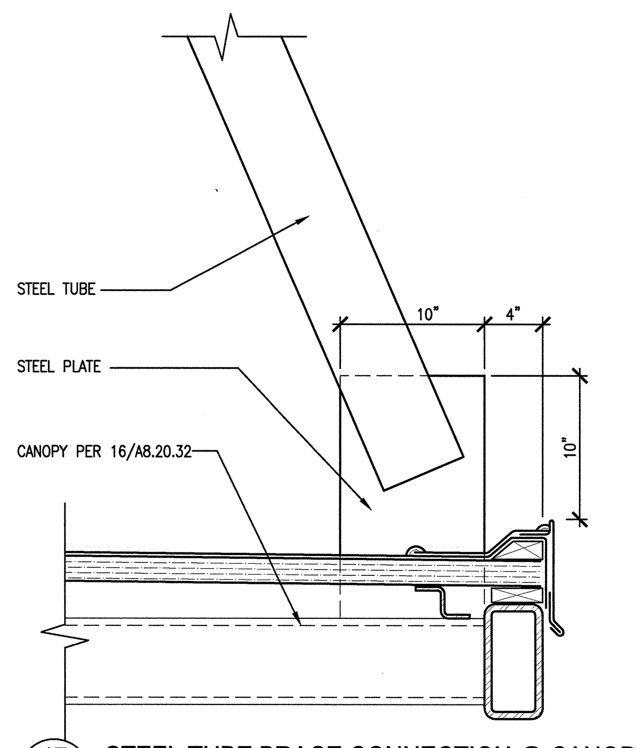

17 STEEL TUBE BRACE CONNECTION @ CANOPY
A3.40.31 SCALE: 1-1/2"=1'-0" ADT074024-5A

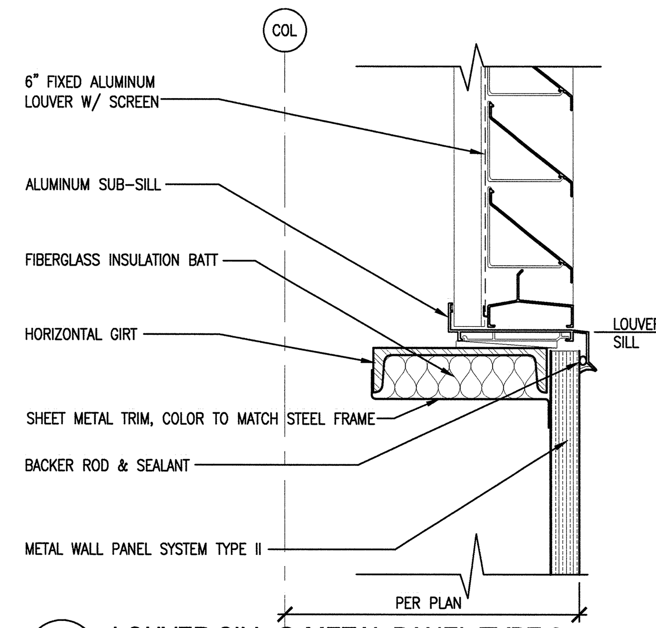

12 LOUVER SILL @ METAL PANEL TYPE 2
A3.40.31 SCALE: 1-1/2"=1'-0" ADT074059-5A

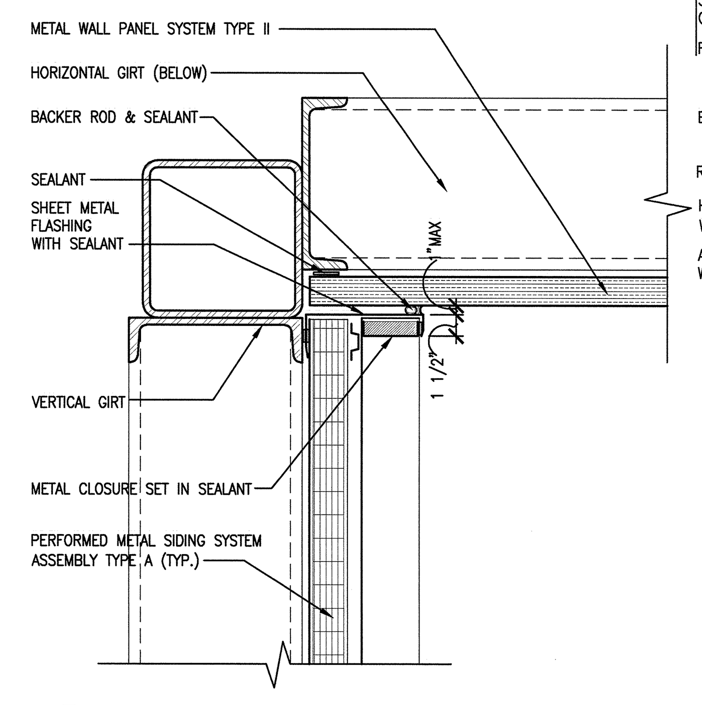

7 INSIDE CORNER @ EXTERNAL CLADDING
A3.40.30 SCALE: 1-1/2"=1'-0" ADT074054-5A

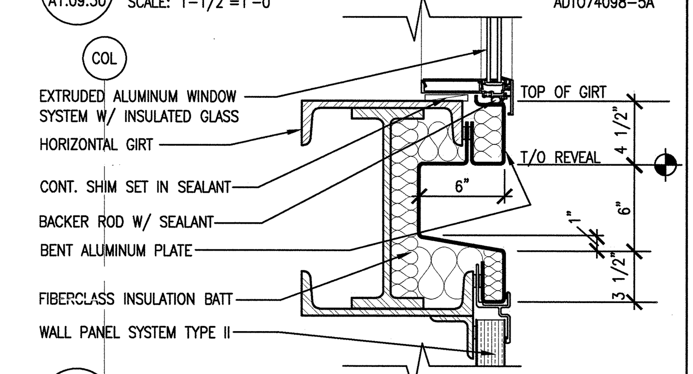

2 WINDOW SILL @ METAL PANEL TYPE 2
A3.40.31 SCALE: 1-1/2"=1'-0" ADT074098-5A

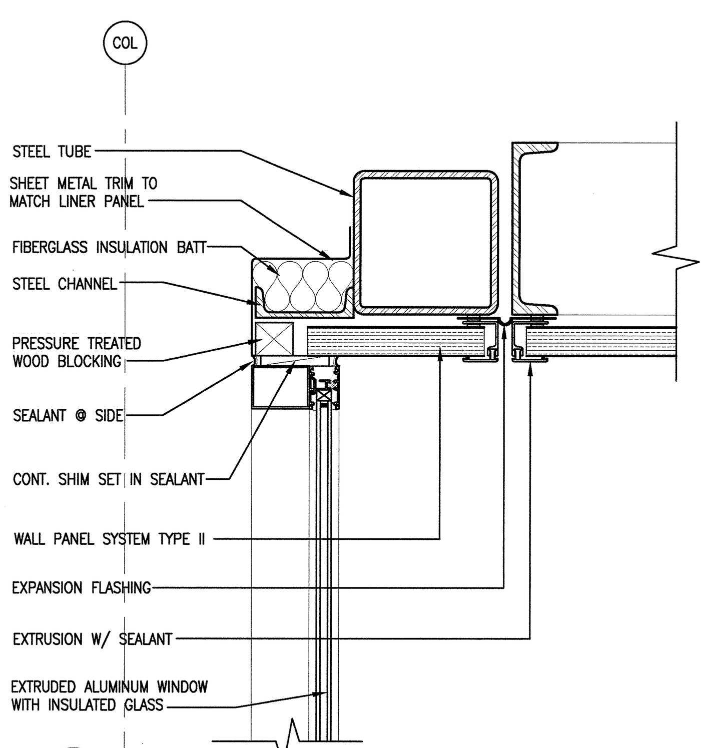

30 WINDOW JAMB @ TARGET AND 11TU
A3.40.31 SCALE: 1-1/2"=1'-0" ADT074102-5A

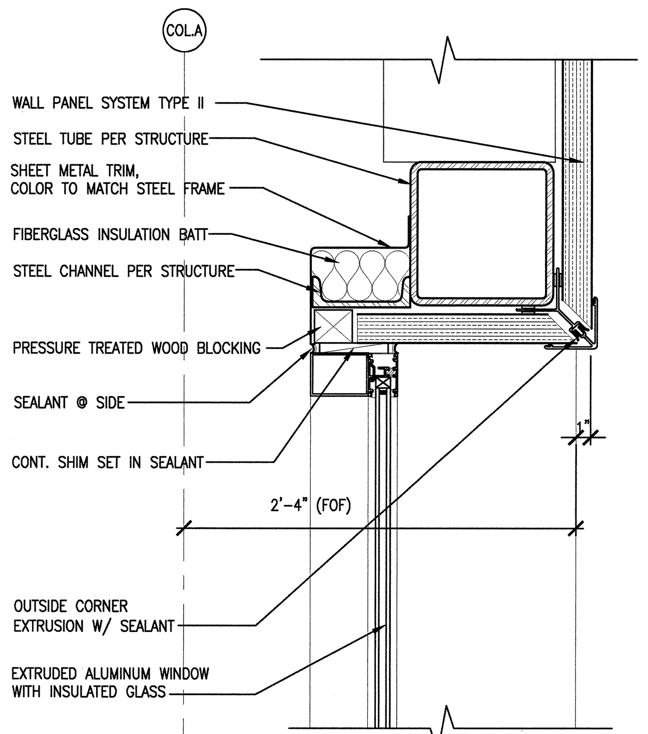

26 WINDOW JAMB
A3.40.31 SCALE: 1-1/2"=1'-0" ADT074093-5A

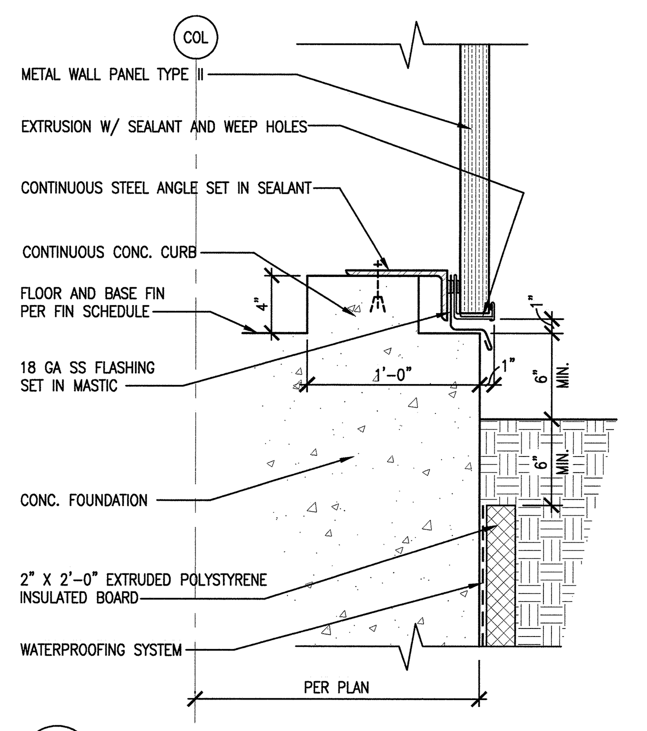

23 WALL PANEL TYPE 2 @ BASE WITH CURB
A2.01.41 SCALE: 1-1/2"=1'-0" ADT074104-5A

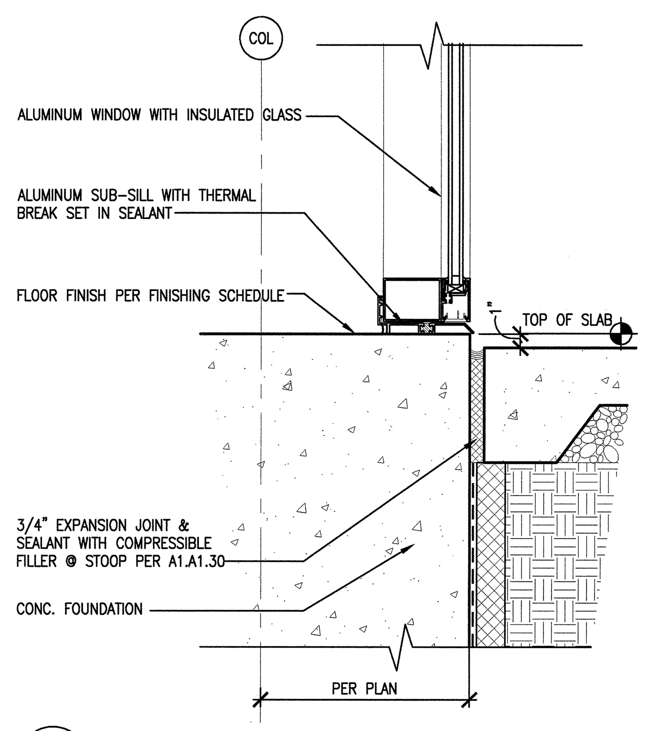

18 WINDOW SILL @ FLOOR SLAB
A3.40.31 SCALE: 1-1/2"=1'-0" ADT085001-5A

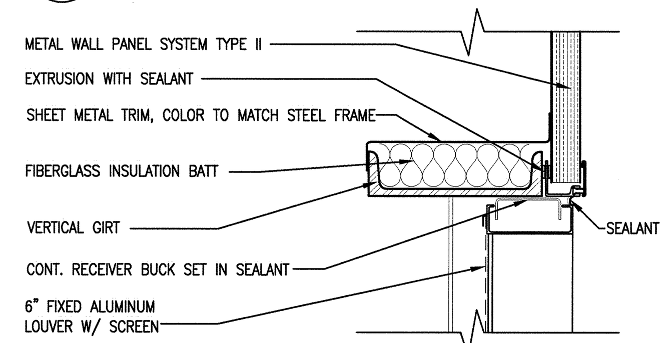

13 LOUVER JAMB @ METAL PANEL TYPE 2
A3.40.31 SCALE: 1-1/2"=1'-0" ADT074059-5A

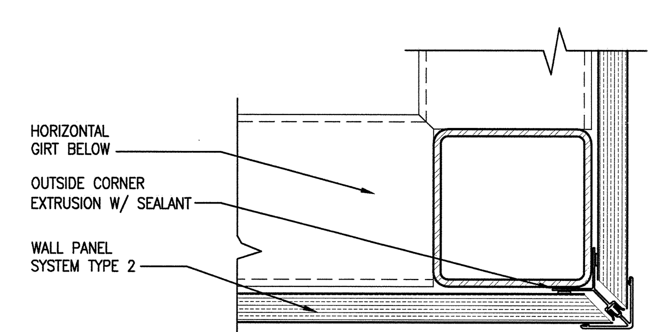

8 WALL PANEL TYPE 2 @ CORNER
A3.40.31 SCALE: 1-1/2"=1'-0" ADT074058-5A

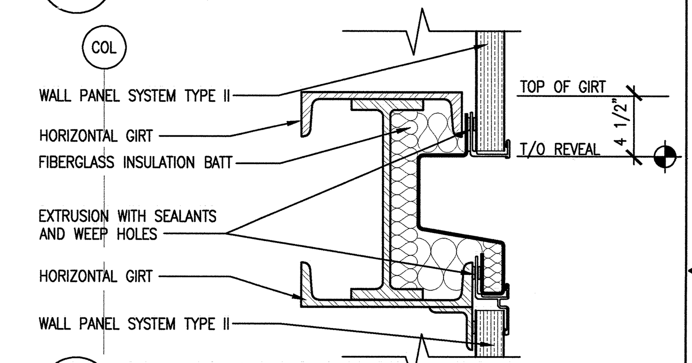

3 REVEAL @ METAL PANEL TYPE 2
A3.40.31 SCALE: 1-1/2"=1'-0" ADT074098-5A

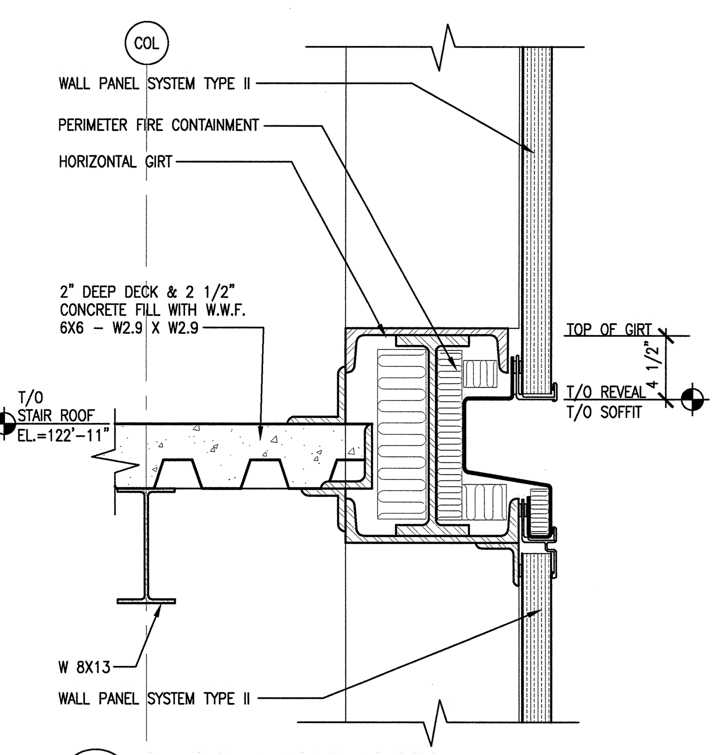

31 REVEAL @ STAIR CEILING
A5.30.30 SCALE: 1-1/2"=1'-0" ADT074102-5A

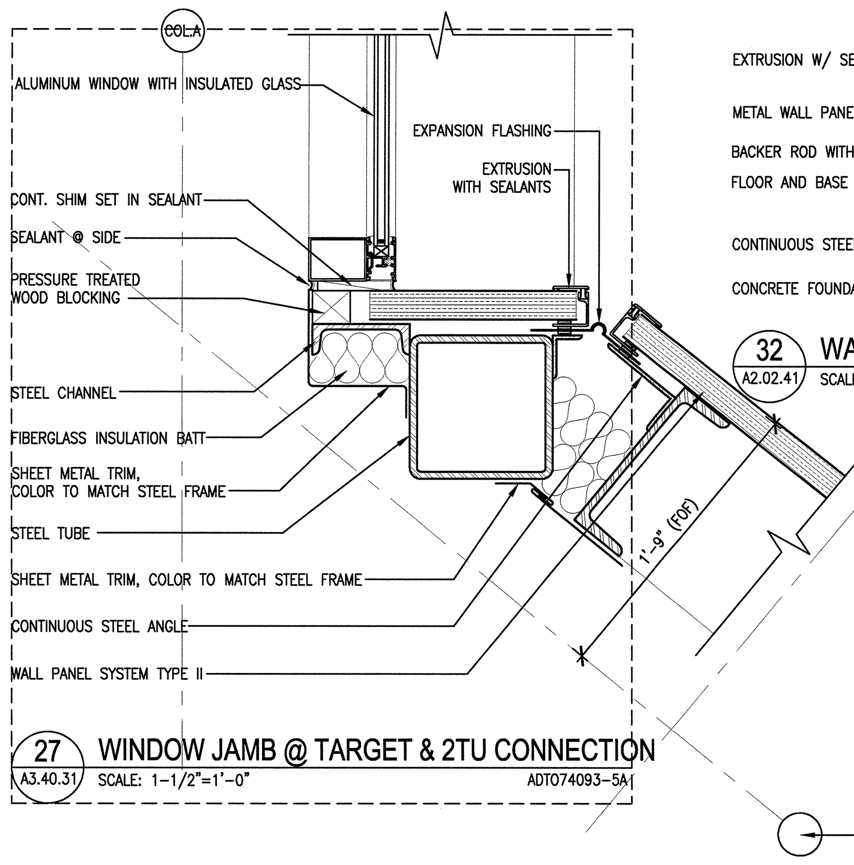

27 WINDOW JAMB @ TARGET & 2TU CONNECTION
A3.40.31 SCALE: 1-1/2"=1'-0" ADT074093-5A

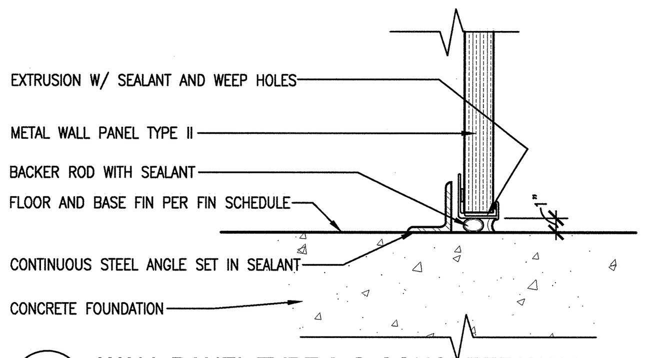

32 WALL PANEL TYPE 2 @ CONCRETE WALL
A2.02.41 SCALE: 1-1/2"=1'-0" ADT074126-5A

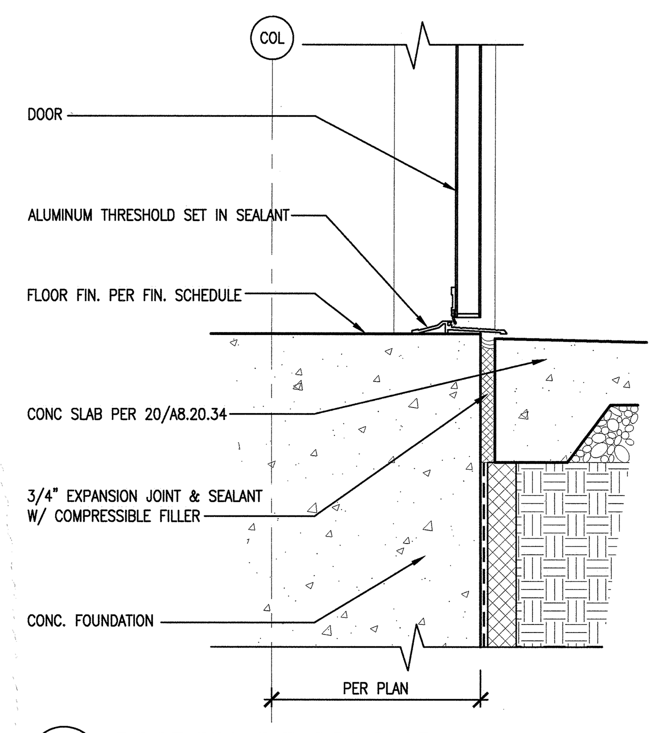

19 DOOR SILL @ FLOOR SLAB
A3.40.31 SCALE: 1-1/2"=1'-0" ADT074091-5A

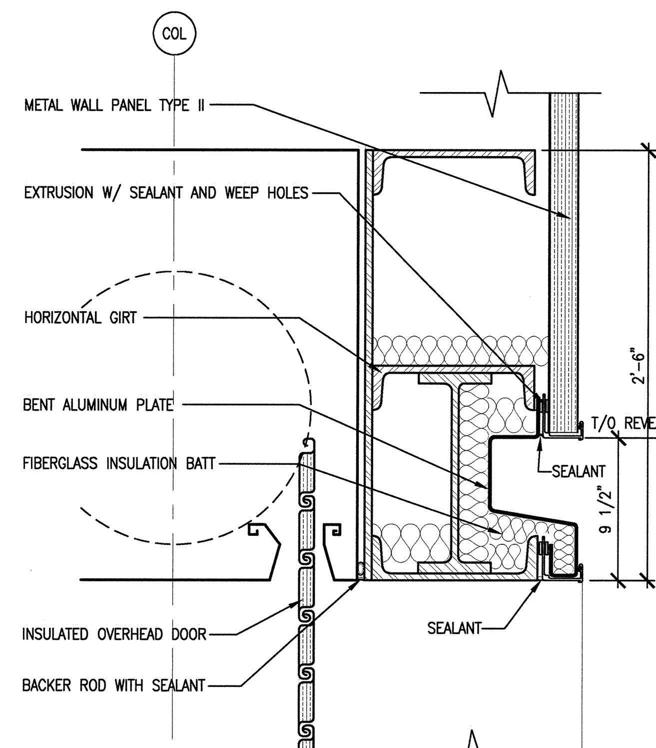

14 OVERHEAD DOOR HEAD @ MTL PANEL TYPE 2
A3.40.31 SCALE: 1-1/2"=1'-0" ADT074090-5A

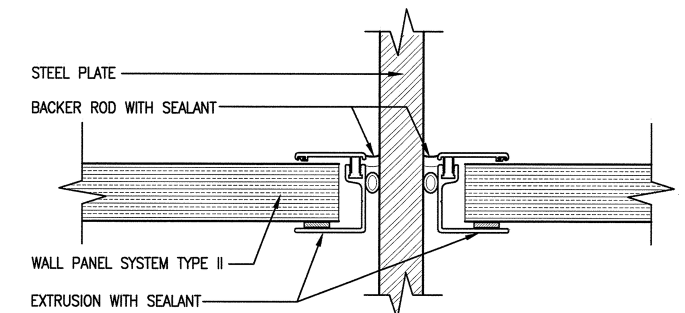

9 STEEL PLATE @ METAL PANEL TYPE 2
A3.40.31 SCALE: 3"=1'-0" ADT074095-5A

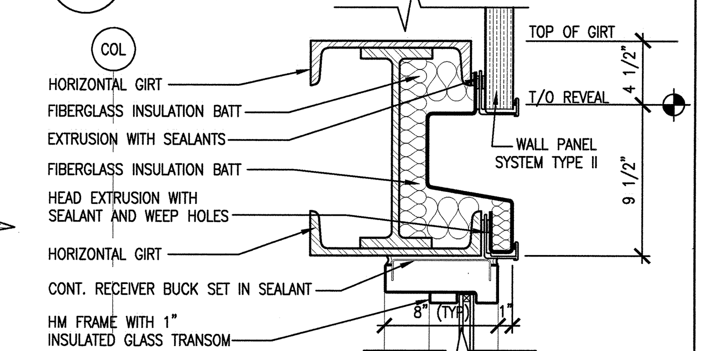

4 WINDOW HEAD @ METAL PANEL TYPE 2
A3.40.31 SCALE: 1-1/2"=1'-0" ADT074098-5A

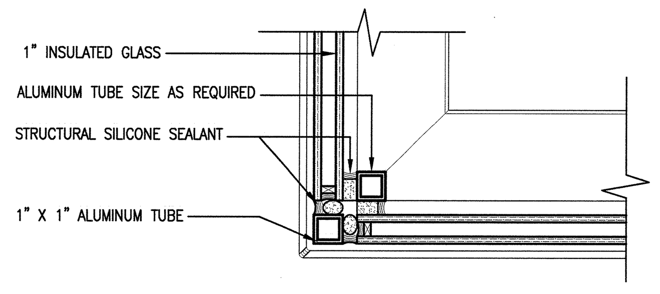

10 WINDOW JAMB @ CORNER
A3.40.31 SCALE: 3"=1'-0" ADT074097-5A

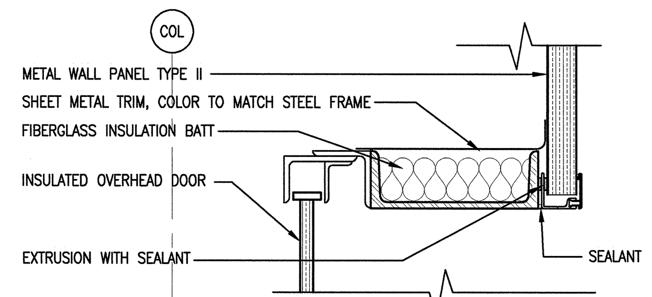

15 OVERHEAD DOOR @ JAMB
A3.40.31 SCALE: 1-1/2"=1'-0" ADT074090-5A

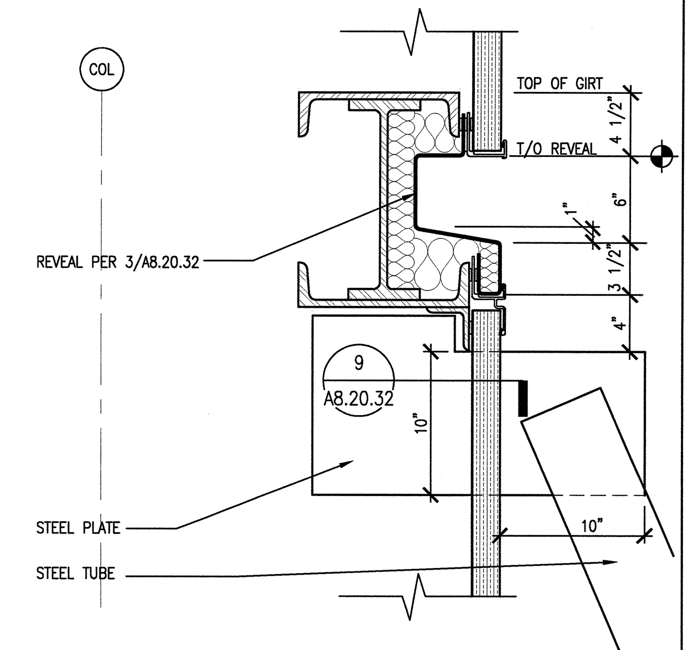

5 STEEL BRACE @ METAL PANEL TYPE 2
A3.40.31 SCALE: 1-1/2"=1'-0" ADT074098-5A

NO REPRESENTATION OR WARRANTY, EXPRESSED OR IMPLIED, IS MADE AS TO THE ACCURACY, COMPLETENESS OR USEFULNESS OF THE INFORMATION OR STATEMENTS CONTAINED IN THESE DRAWINGS, OR THAT THE USE OR DISCLOSURE OF ANY INFORMATION, APPARATUS, METHOD, OR PROCESS DISCLOSED IN THESE DRAWINGS MAY NOT INFRINGE PRIVATE RIGHTS OF OTHERS. NO LIABILITY IS ASSUMED WITH RESPECT TO THE USE OF, OR FOR DAMAGES RESULTING FROM THE USE OF ANY INFORMATION, APPARATUS, METHOD, OR PROCESS DISCLOSED IN THESE DRAWINGS. DRAWINGS MADE AVAILABLE FOR INFORMATION TO BIDDER ARE NOT TO BE USED FOR OTHER PURPOSES AND ARE TO BE RETURNED UPON REQUEST OF THE FORWARDING CONTRACTOR.

SECTION AND DETAIL KEY: NUMBER OF SECTION OR DETAIL / DRAWING ON WHICH SECTION OR DETAIL IS SHOWN OR TAKEN

THIS DOCUMENT CONTROLLED BY
CHANGE CONTROL SYSTEM 3
ENGINEERING PROCEDURE SNS-ENG-G001

REV	CHANGE TYPE	CHANGE CONTROL SYSTEM	CHANGE REQUEST NUMBER	DESCRIPTION	DSN	CHK	DEPT	DATE	PE	DATE	PJ	DATE	REQ	DATE	UTB	DATE	RPE	RPE NO	DATE
0				CERTIFIED FOR CONSTRUCTION - 10/26/01	MBB	ED			[signature]	11/13/01	RAD	11/14/01			[signature]	11/14/01	RLB	102104	11/13/01

REVISION OR ISSUE PURPOSE — REVISION APPROVALS

ST	CV	EC	EE	EM	IE	M	PD	SE	AR
REW	–	WRS	AK	WRS	BWJ	–	MP	–	ED

SQUAD CHECK

RPE: ROBERT L. BARNES, REGISTERED ARCHITECT, NO. 102104, STATE OF TENNESSEE

DSN	M. BRADLEY	10/26/01
DRW	I. WANG	10/26/01
CHK	E.DENSON	10/26/01
DEPT		
PE	[signature]	11/13/01
PJ	[signature]	11/14/01
REQ		

REV. 0 DATE 11-13-01 UTB [signature] 11/14/01
DRAWING APPROVALS

108030700-A8E-8700-A111

Knight/Jacobs Joint Venture
701 Scarboro Road, MS 8253
Oak Ridge, TN 37830
865-241-9433
fax 865-241-3400

KNIGHT
Knight Advanced Technology
549 West Randolph Street
Chicago, IL 60661

UT-BATTELLE
Oak Ridge National Laboratory
managed for the DEPARTMENT OF ENERGY under U.S. GOVERNMENT contract DE-AC05-00OR22725
UT-BATTELLE, LLC, Oak Ridge, Tennessee

PROJECT NAME:
SPALLATION NEUTRON SOURCE

TARGET BUILDING
ROOF & WALL DETAILS

1	48	49	50	PLANT	BLDG	FL	SH.	OF	TYPE	CLASS
3	A	X	X	8	8700		1	1	G	U

51	52	53	WBS		REV
NC	NA		1.8.3.7	A8.20.32	0

Date: 11/13/2001 Time: 13:36:13
Username: WANGIW
CHI-F_VOL2:PROJECTS\7000\700_CADD\TASK_5A\740_PLOT\A8-20-32.DWG

AutoCAD