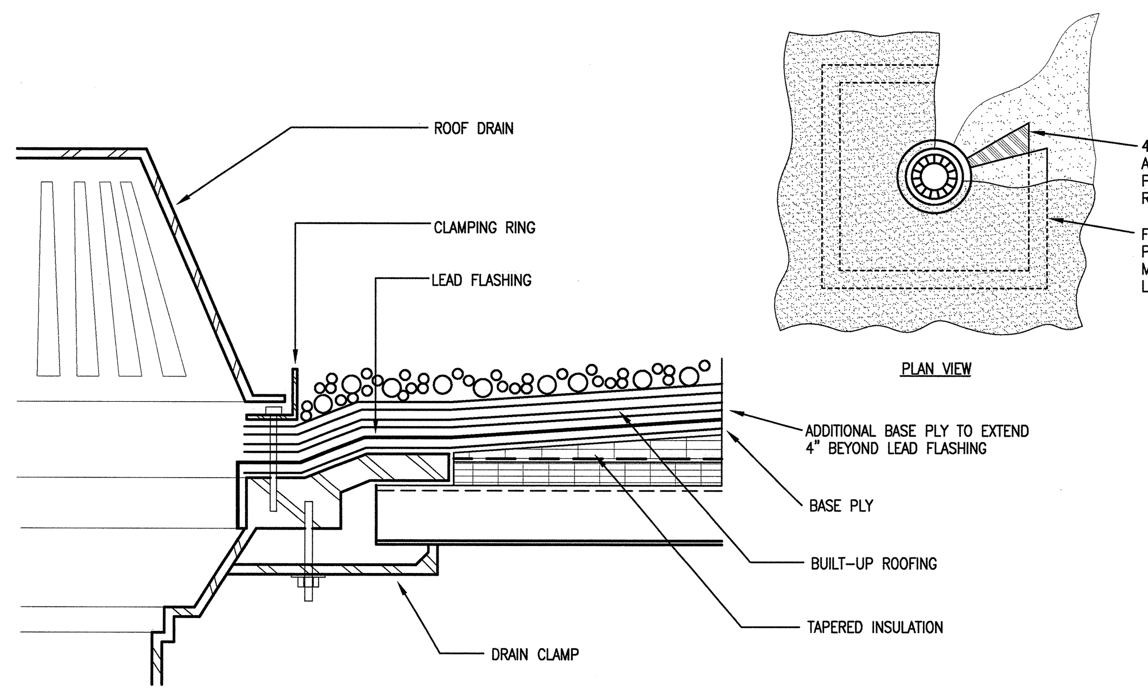

25 (A1.09.30) ROOF DRAIN @ BUR
SCALE : 3"= 1'-0" ADT075002-00

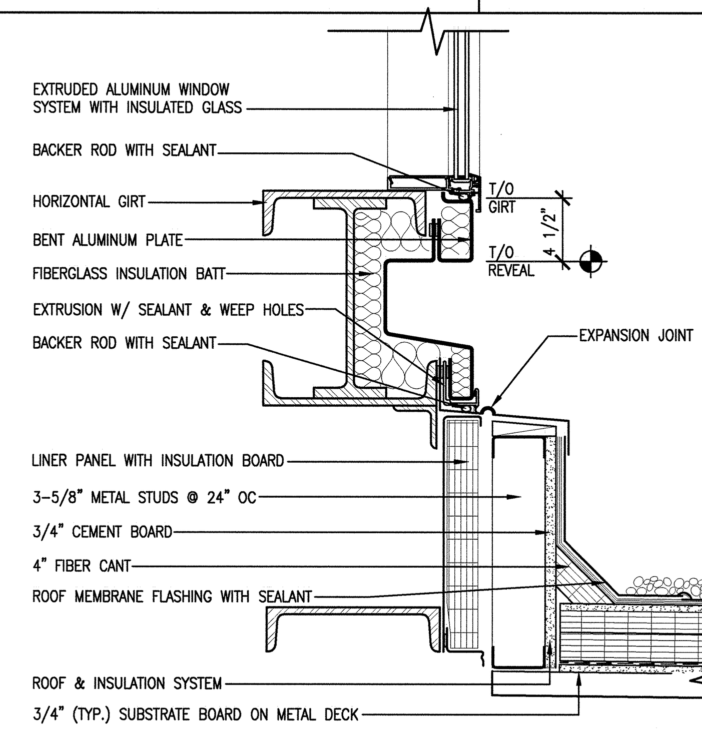

17 (A3.20.39) WINDOW SILL AND REVEAL @ ROOF DECK
SCALE: 1-1/2"=1'-0" ADT074021-5A

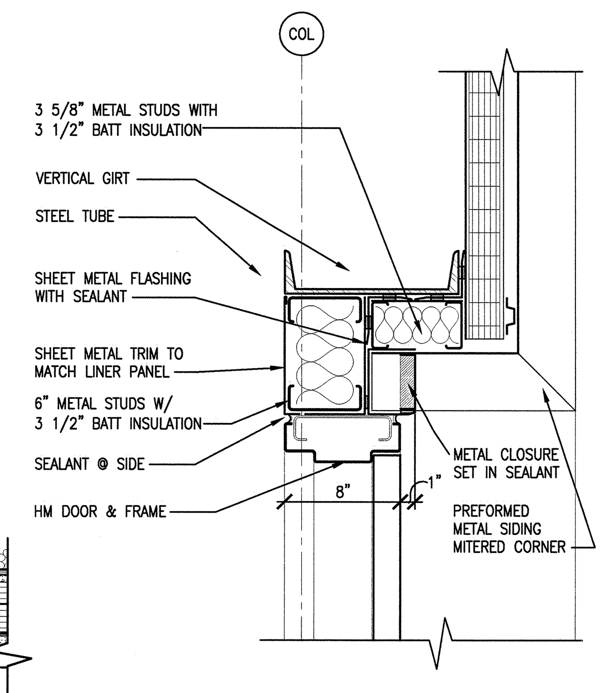

13 (A3.20.39) DOOR JAMB @ PREFORMED METAL SIDING
SCALE: 1-1/2"=1'-0" ADT074128-5A

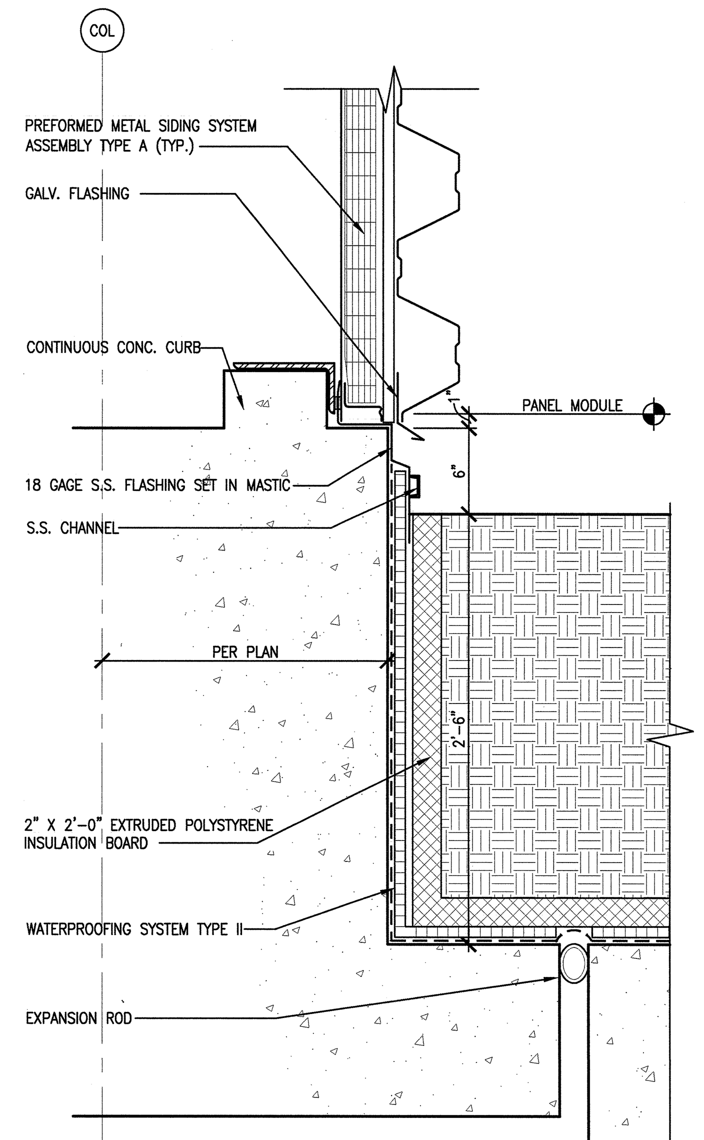

5 (A3.30.35) BELOW GRADE ROOF & EXPANSION JOINT
SCALE: 1-1/2"=1'-0" ADT074120-5A

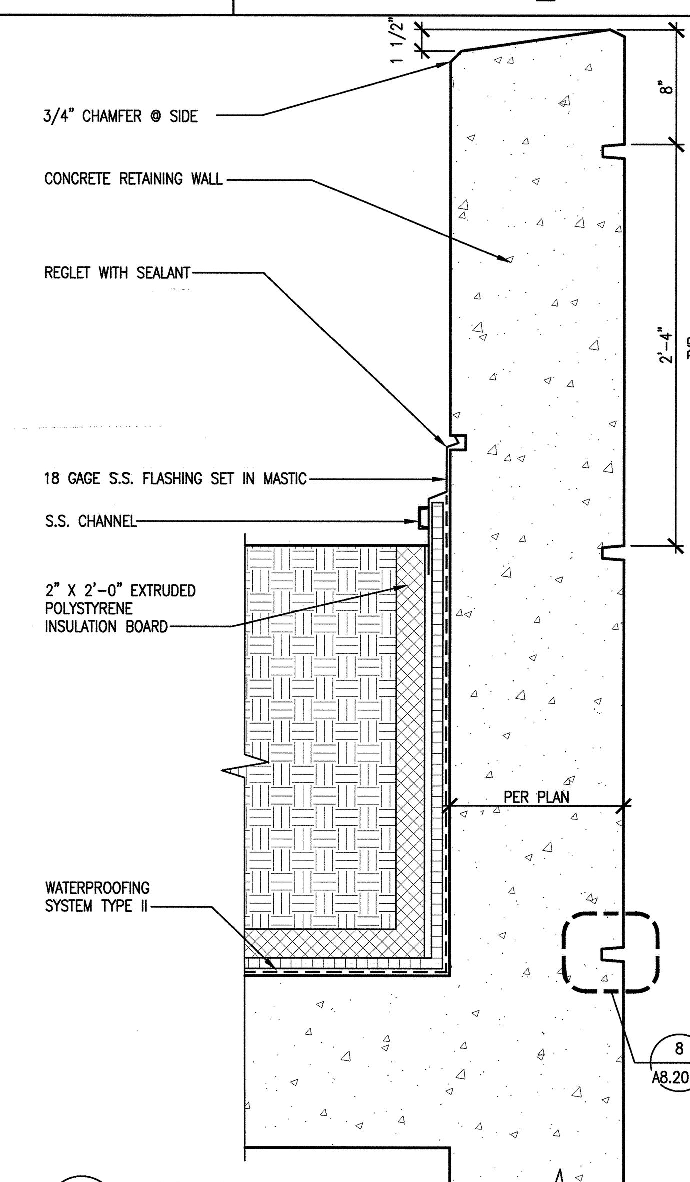

4 (A3.30.35) ROOF @ RETAINING WALL
SCALE: 1-1/2"=1'-0" ADT074119-5A

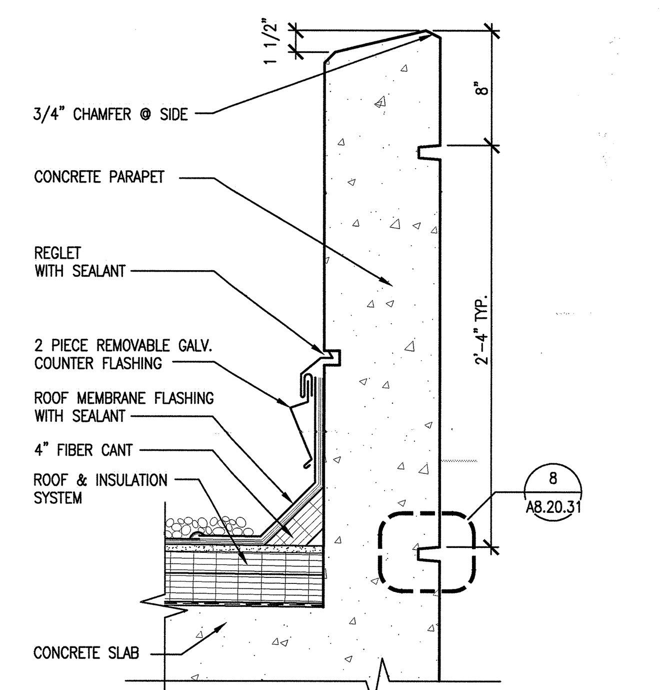

1 (A3.40.30) PARAPET @ CONCRETE WALL
SCALE: 1-1/2"=1'-0" ADT074110-5A

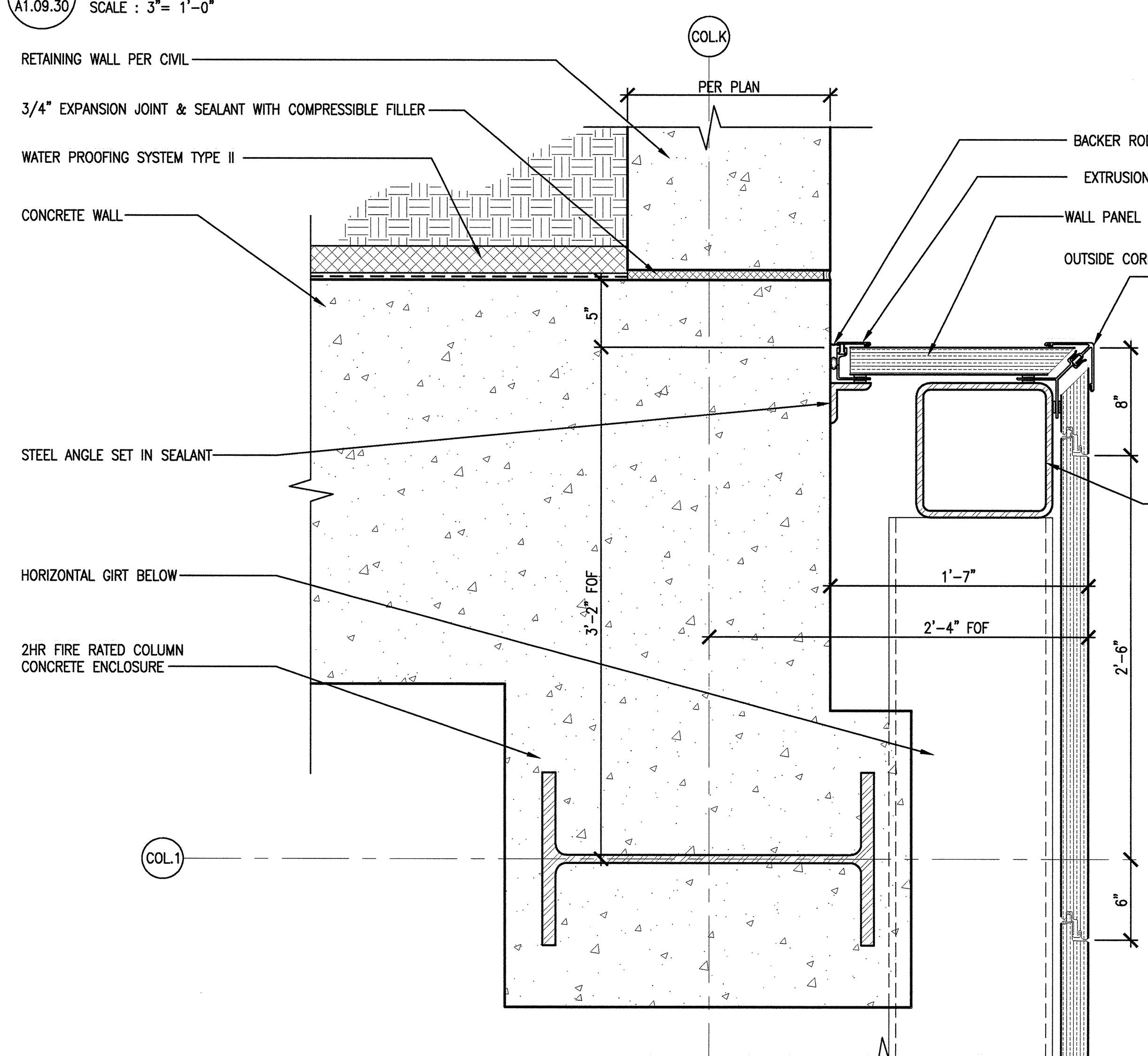

26 (A2.01.41) WALL PANEL TYPE 2 @ OUTSIDE CORNER
SCALE: 1-1/2"=1'-0" ADT074023-5A

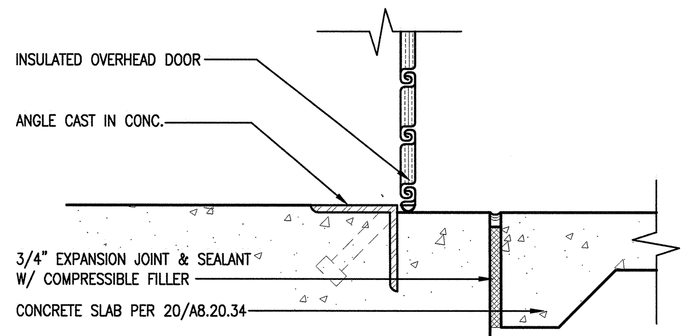

19 (A3.30.35) DETAIL @ OVERHEAD DOOR SILL
SCALE: 1-1/2"=1'-0" ADT074087-5A

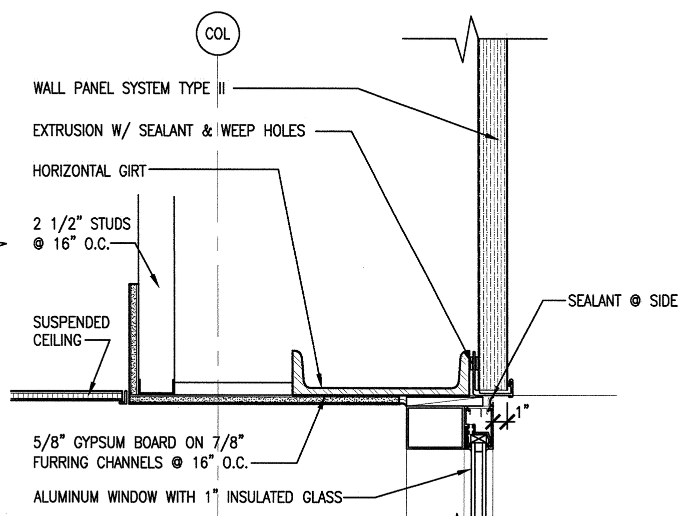

12 (A3.40.30) WINDOW HEAD
SCALE: 1-1/2"=1'-0" ADT074028-5A

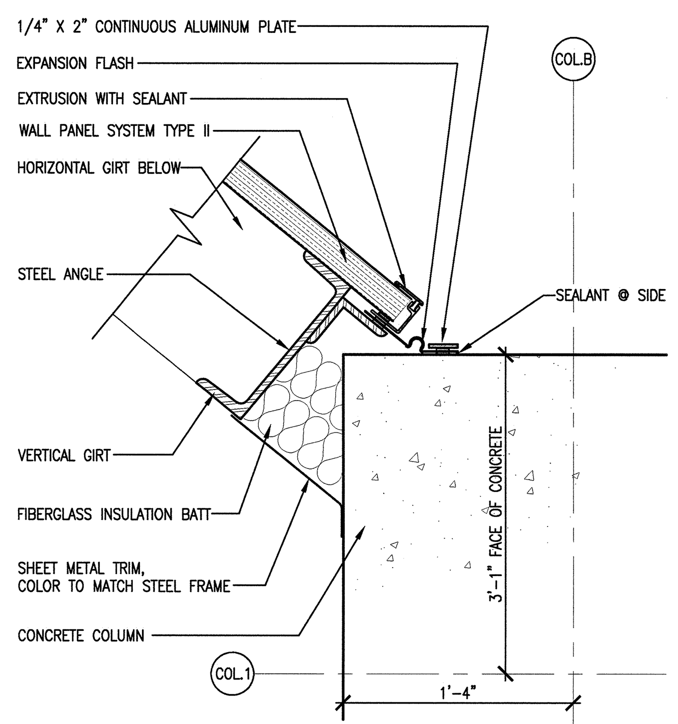

21 (A2.01.43) WALL TYPE 2 INSIDE CORNER @ 2TU
SCALE: 1-1/2"=1'-0" ADT074096-5A

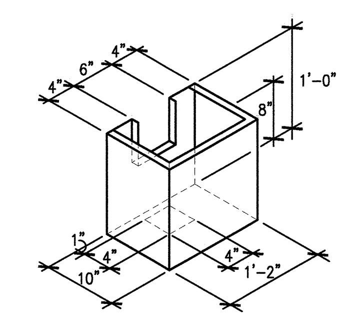

PREFABRICATED SHEET METAL LEADER

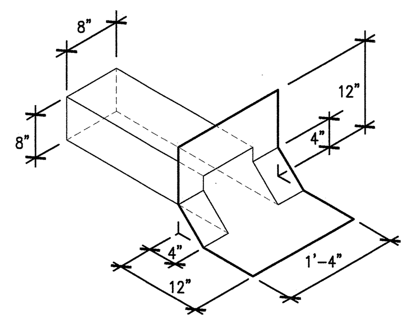

PREFABRICATED SHEET METAL SCUPPER

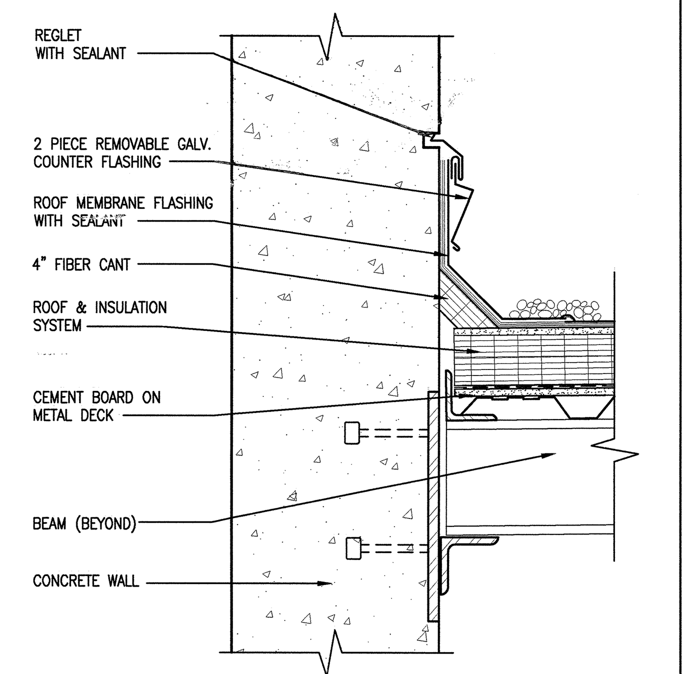

2 (A3.40.30) CONCRETE WALL @ ROOF DECK
SCALE: 1-1/2"=1'-0" ADT074110-5A

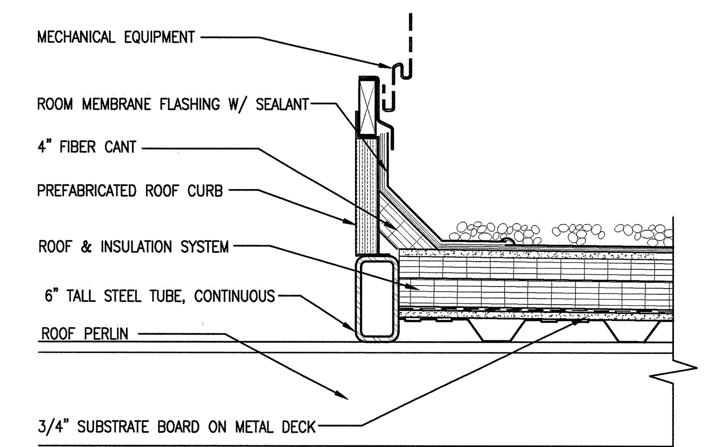

6 (A1.09.30) EQUIPMENT CURB
SCALE: 1-1/2"=1'-0" ADT074099-5A

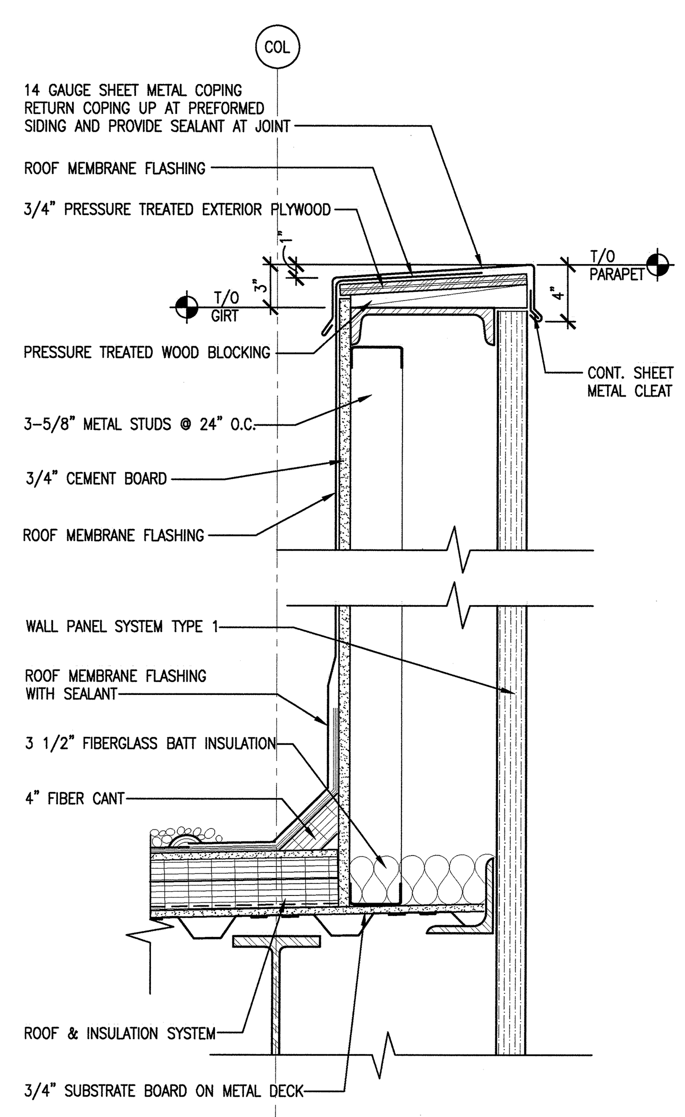

14 (A3.20.34) PARAPET
SCALE: 1-1/2"=1'-0" ADT074115-5A

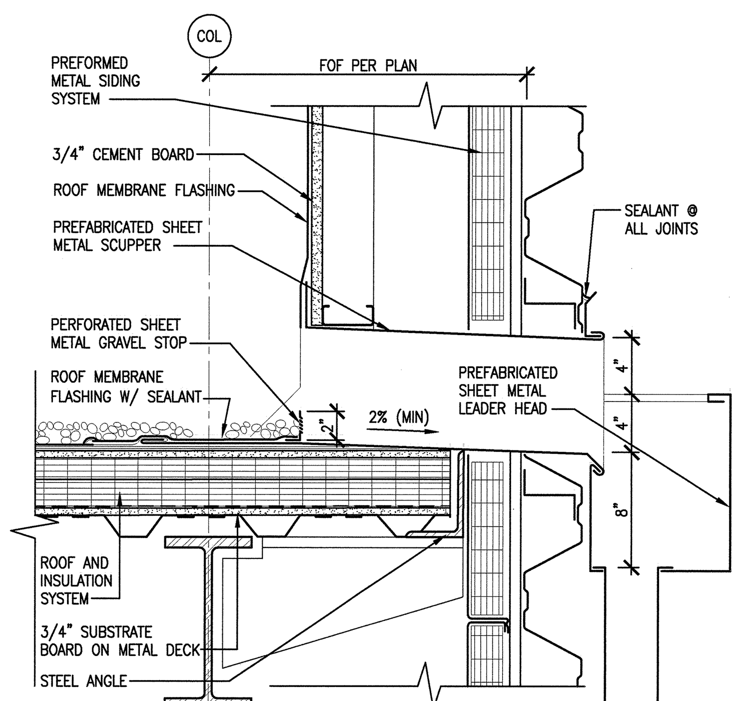

10 (A1.09.31) SCUPPER @ PREFORMED METAL SIDING
SCALE: 1-1/2"=1'-0" ADT074022-5A

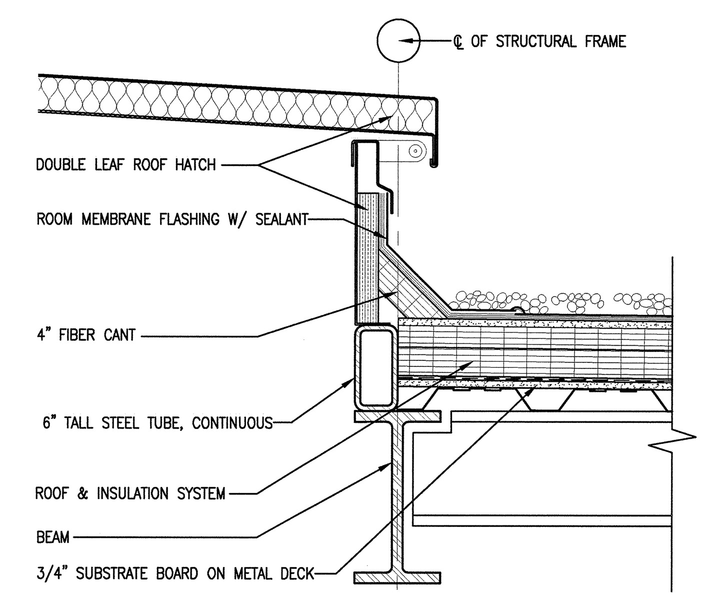

7 (A3.40.30) ROOF HATCH
SCALE: 1-1/2"=1'-0" ADT074099-5A

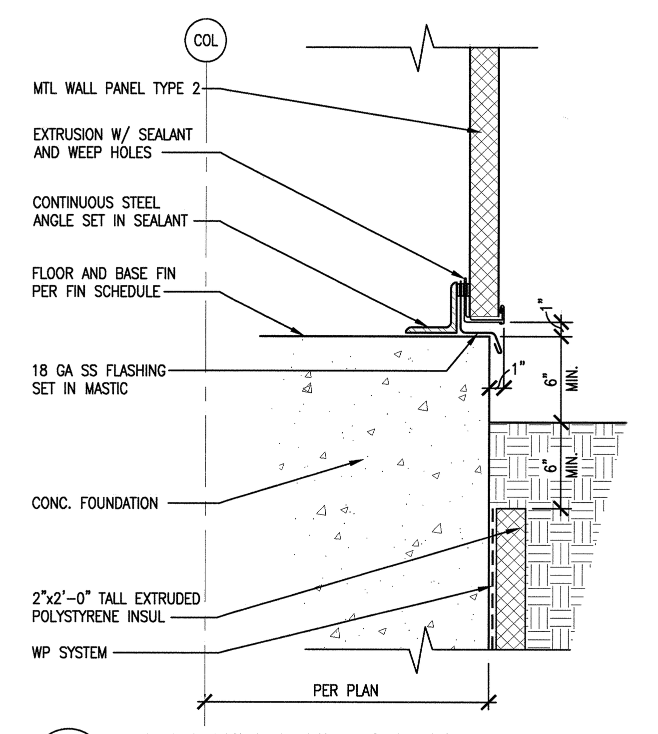

3 (A3.40.31) WALL PANEL TYPE 2 @ BASE
SCALE: 1-1/2"=1'-0" ADT074116-5A

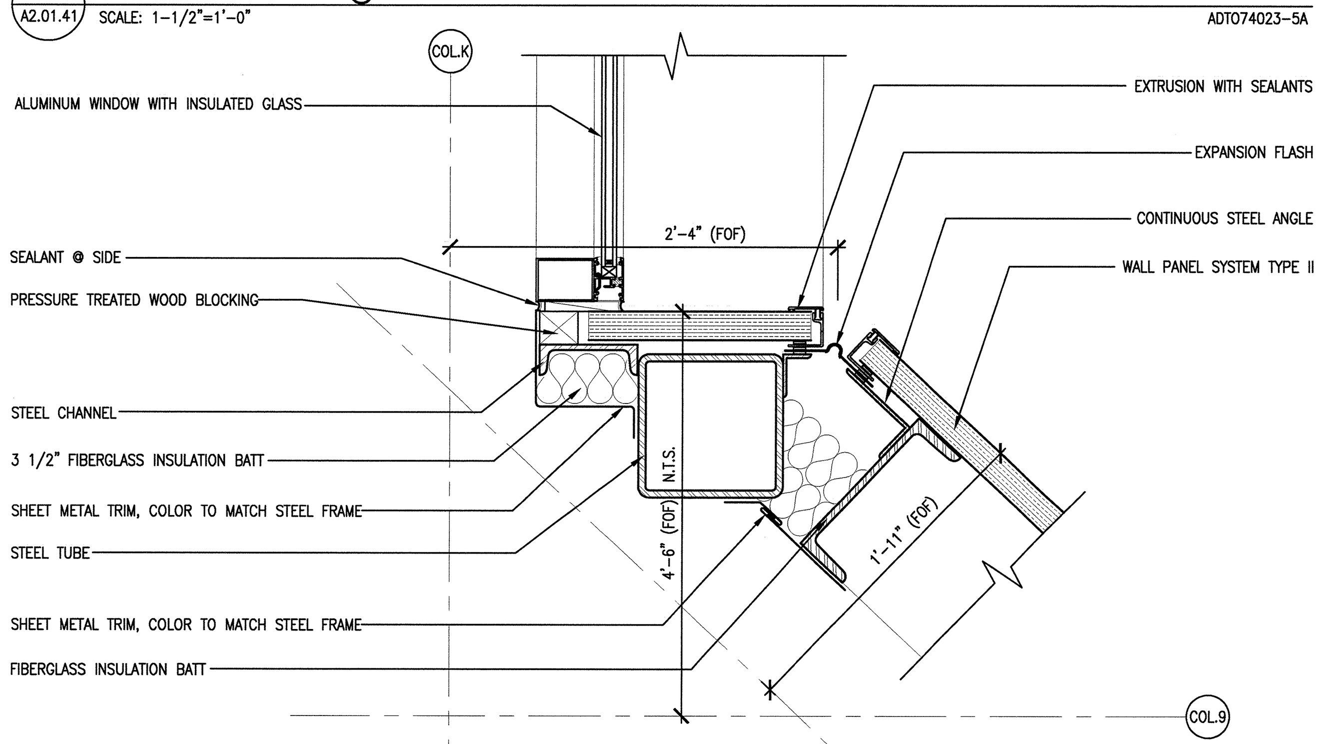

27 (A2.01.56) WINDOW JAMB @ TARGET & 11TU CONNECTION
SCALE: 1-1/2"=1'-0" ADT074085-5A

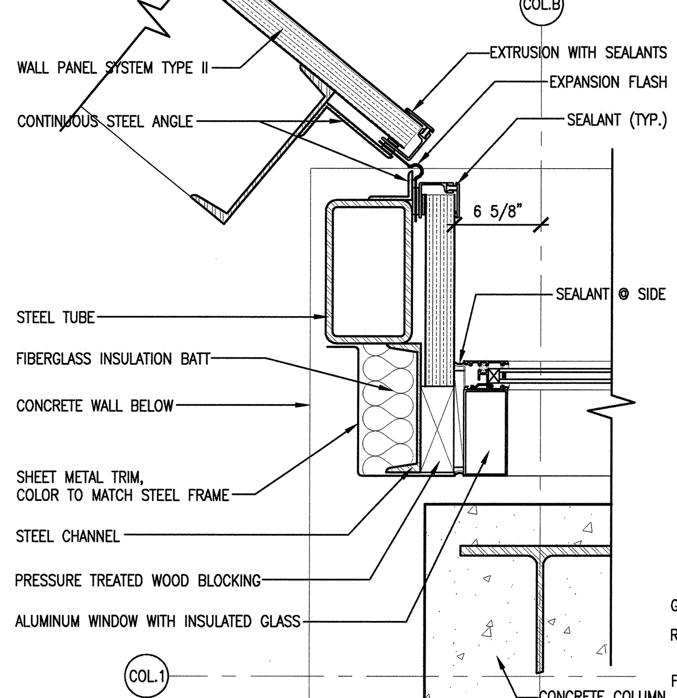

22 (A3.40.31) WINDOW JAMB @ TARGET & 2TU CONNECTION
SCALE: 1-1/2"=1'-0" ADT074088-5A

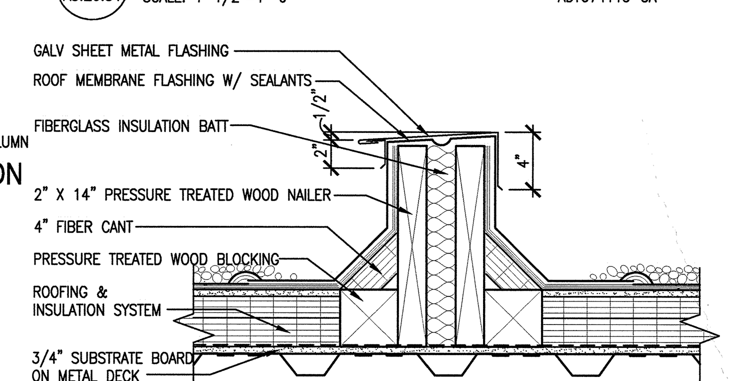

15 (A1.09.30) ROOF EXPANSION JOINT
SCALE : 1-1/2"= 1'-0" ADT075004-5A

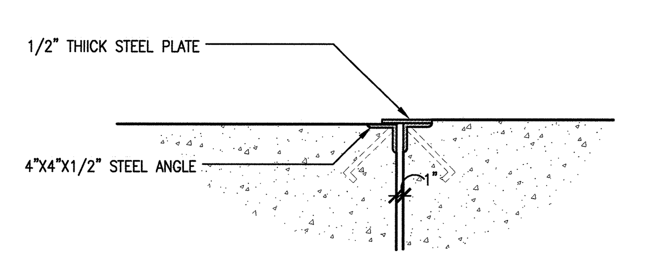

11 (A2.B1.48) EXPANSION JOINT @ CONCRETE FLOOR
SCALE: 3/4"=1'-0" ADT033013-5A

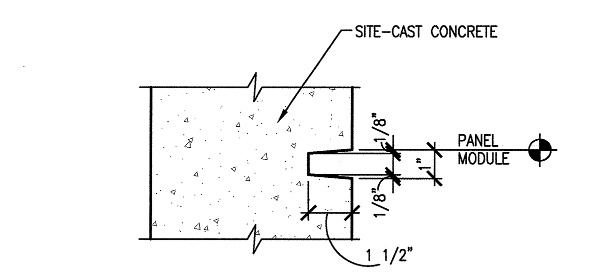

8 (A3.40.30) DETAIL - HORIZONTAL CONCRETE REVEAL
SCALE: 3"=1'-0" ADT074112-5A

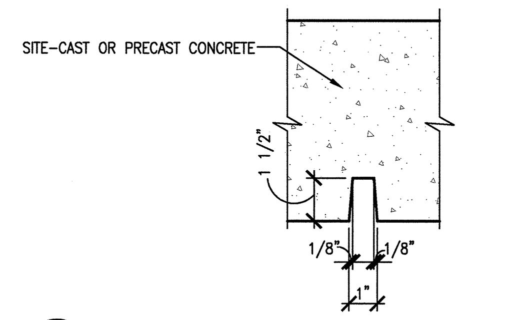

8A (A3.40.30) DETAIL - VERTICAL CONCRETE REVEAL
SCALE: 3"=1'-0" ADT074113-5A

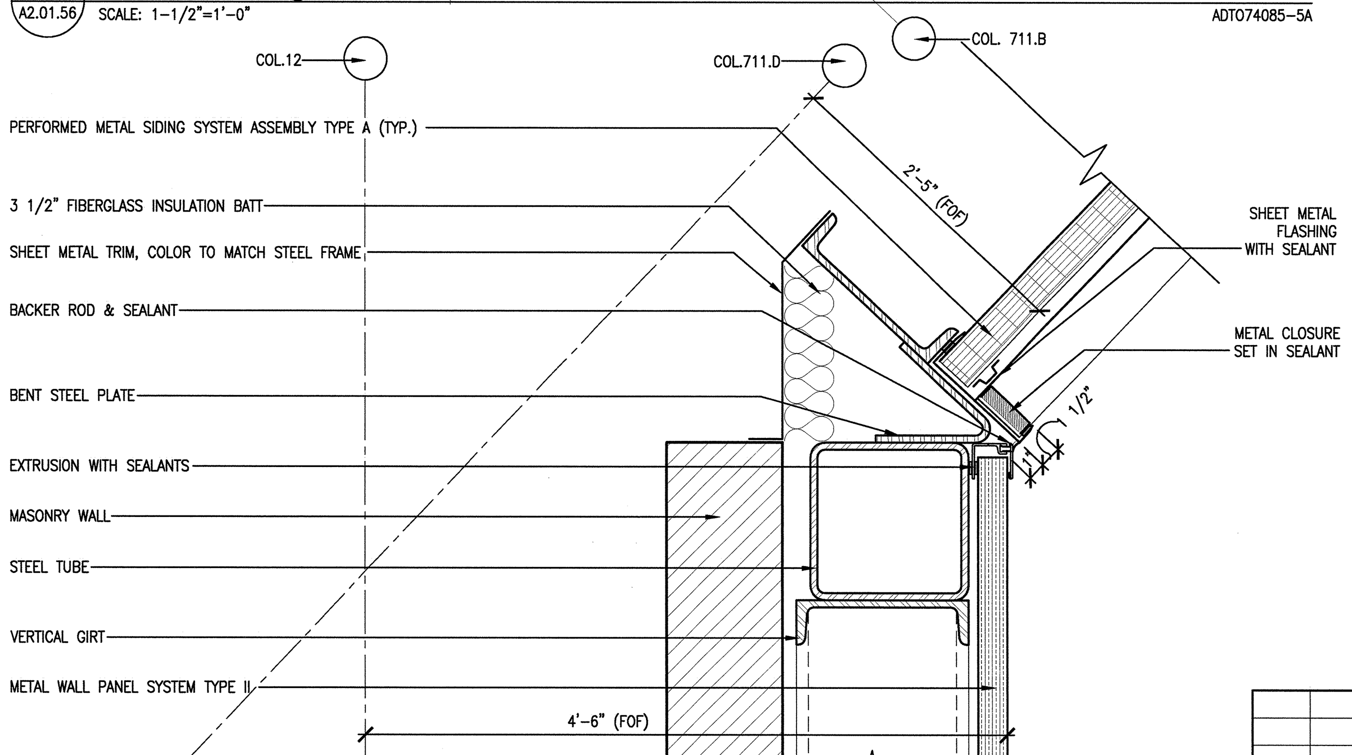

28 (A2.01.56) INSIDE CORNER @ 11TU
SCALE: 1-1/2"=1'-0" ADT074086-5A

NO REPRESENTATION OR WARRANTY, EXPRESSED OR IMPLIED, IS MADE AS TO THE ACCURACY, COMPLETENESS OR USEFULNESS OF THE INFORMATION OR STATEMENTS CONTAINED IN THESE DRAWINGS, OR THAT THE USE OR DISCLOSURE OF ANY INFORMATION, APPARATUS, METHOD, OR PROCESS DISCLOSED IN THESE DRAWINGS MAY NOT INFRINGE PRIVATE RIGHTS OF OTHERS. NO LIABILITY IS ASSUMED WITH RESPECT TO THE USE OF, OR FOR DAMAGES RESULTING FROM THE USE OF ANY INFORMATION, APPARATUS, METHOD, OR PROCESS DISCLOSED IN THESE DRAWINGS. DRAWINGS MADE AVAILABLE FOR INFORMATION TO BIDDER ARE NOT TO BE USED FOR OTHER PURPOSES AND ARE TO BE RETURNED UPON REQUEST OF THE FORWARDING CONTRACTOR.

NUMBER OF SECTION OR DETAIL
DRAWING ON WHICH SECTION OR DETAIL IS SHOWN OR TAKEN
SECTION AND DETAIL KEY

THIS DOCUMENT CONTROLLED BY
CHANGE CONTROL SYSTEM 3
ENGINEERING PROCEDURE SNS-ENG-G001

REV	CHANGE TYPE	CHANGE CONTROL SYSTEM	CHANGE REQUEST NUMBER	DESCRIPTION	DSN	CHK	DEPT	DATE	PE	DATE	PJ	DATE	REQ	DATE	UTB	DATE	RPE	RPE NO	DATE
0				CERTIFIED FOR CONSTRUCTION – 10/26/01	MBB	EW			[signature]	11/15/01	RAD	11/14/01			[signature]	11/14/01	RLB	102104	8/3/01

REVISION OR ISSUE PURPOSE — REVISION APPROVALS

ST	CV	EC	EE	EM	IE	M	PD	SE	AR
REW	–	WRS	AK	WRS	BWJ	–	MP	–	ED

SQUAD CHECK

RPE — ROBERT L. BARNES, REGISTERED ARCHITECT, NO. 102104, STATE OF TENNESSEE

DSN	M. BRADLEY	10/26/01
DRW	I. WANG	10/26/01
CHK	E.DENSON	10/26/01
DEPT		
PE	[signature]	11/15/01
PJ	RaDean	11/14/01
REQ		
UTB	[signature]	11/14/01

REV. 0 DATE 11-13-01
DRAWING APPROVALS

108030700-A8E-8700-A110

Knight/Jacobs SNS
Knight/Jacobs Joint Venture
701 Scarboro Road, MS 8253
Oak Ridge, TN 37830
865-241-9433
fax 865-241-3400

KNIGHT
Knight Advanced Technology
549 West Randolph Street
Chicago, IL 60661

UT-BATTELLE
Oak Ridge National Laboratory
managed for the DEPARTMENT OF ENERGY under
U.S. GOVERNMENT contract DE-AC05-00OR22725
UT-BATTELLE, LLC, © Oak Ridge, Tennessee

PROJECT NAME:
SPALLATION NEUTRON SOURCE

TARGET BUILDING ROOF & WALL DETAILS

1	48	49	50	PLANT	BLDG	FL	SH.	OF	TYPE	CLASS
3	A	X	X	8	8700		1	1	G	U

51	52	53	WBS		REV
NC	NA		1.8.3.7	A8.20.31	0

Date: 11/13/2001 Time: 13:37:01
Username: WANGIW
CH-F_VOL2:PROJECTS\7000\700_CADD\TASK_5A\740_PLOT\A8-20-31.DWG

AutoCAD