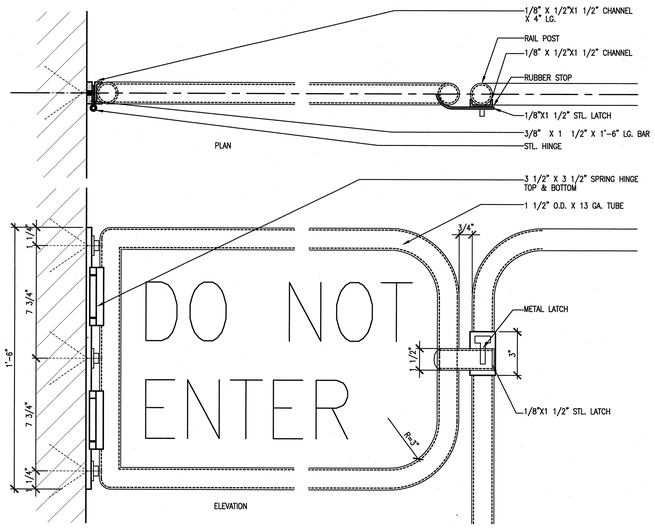

24 A5.30.35 GATE @ WALL DETAIL
SCALE: 3"=1'-0" ADT108013-5A

NOTE:
1. PAINT ALL EXPOSED SURFACES
2. PAINT LETTERS IN 6" HIGH LETTERS PER CODE

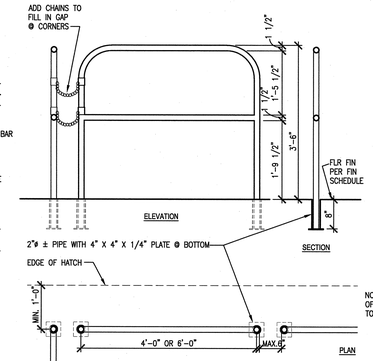

20 A5.30.35 REMOVABLE GUARDRAIL @ HATCH OPENING
SCALE: 3/4"=1'-0" ADT033006-5A

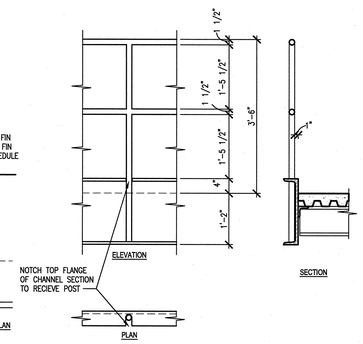

14 A5.30.35 GUARDRAIL
SCALE: 3/4"=1'-0" ADT033001-5A

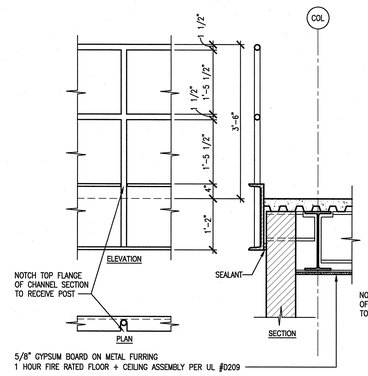

21 A3.30.37 GUARDRAIL @ OVERLOOK
SCALE: 3/4"=1'-0" ADT033005-5A

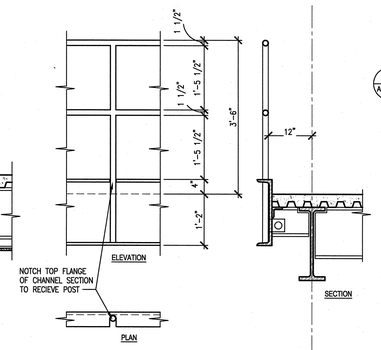

15 A5.30.35 GUARDRAIL
SCALE: 3/4"=1'-0" ADT033002-5A

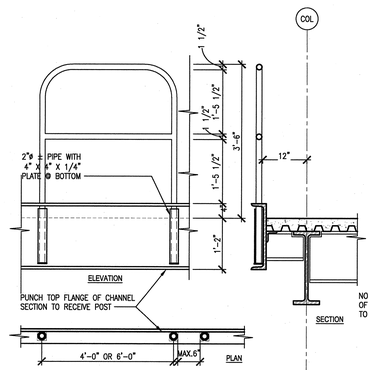

22 A2.03.48 REMOVABLE GUARDRAIL @ WALKWAY
SCALE: 3/4"=1'-0" ADT033007-5A

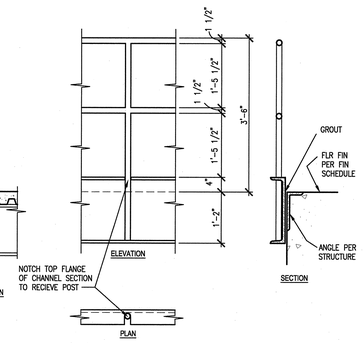

17 A2.01.42 GUARDRAIL
SCALE: 3/4"=1'-0" ADT033003-5A

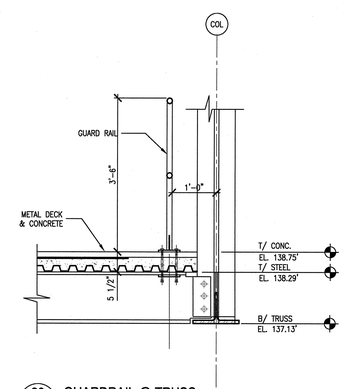

23 A3.40.30 GUARDRAIL @ TRUSS
SCALE: 3/4"=1'-0" ADT033010-5A

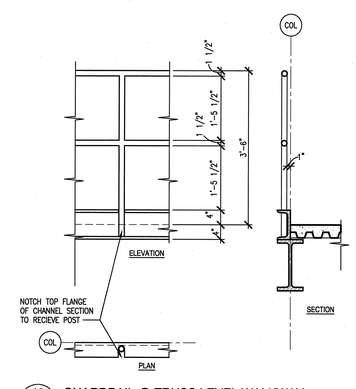

18 A5.30.35 GUARDRAIL @ TRUSS LEVEL WALKWAY
SCALE: 3/4"=1'-0" ADT033004-5A

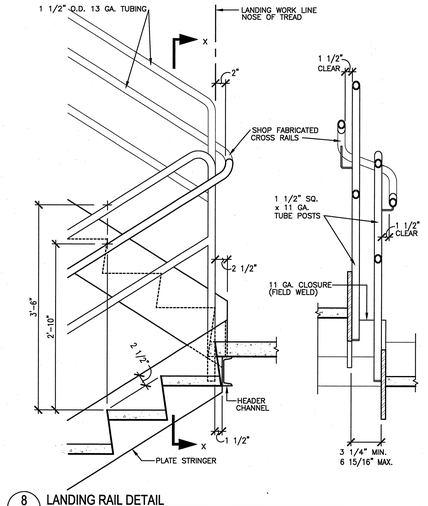

8 A5.30.35 LANDING RAIL DETAIL
SCALE: 1"=1'-0" ADT055502-5A

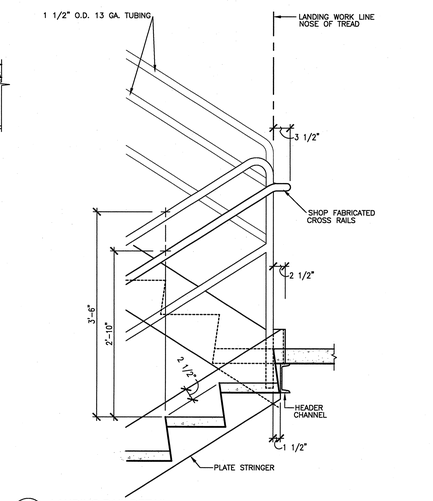

10 A5.30.35 LANDING RAIL DETAIL
SCALE: 1"=1'-0" ADT055502-5A

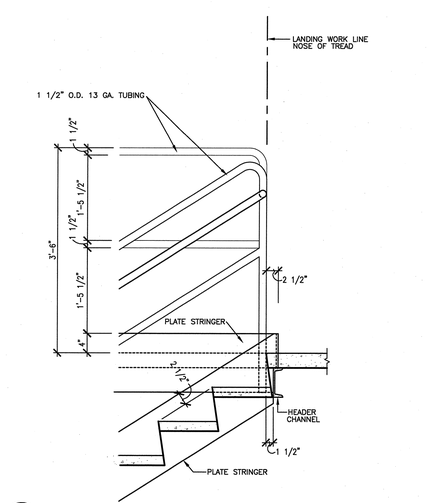

12 A5.30.35 LANDING RAIL DETAIL
SCALE: 1"=1'-0" ADT055502-5A

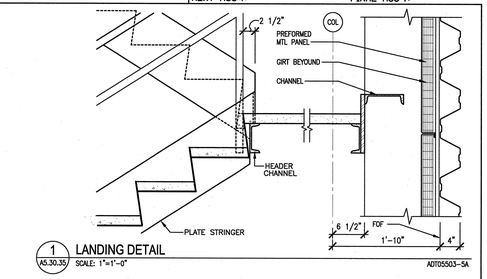

1 A5.30.35 LANDING DETAIL
SCALE: 1"=1'-0" ADT055503-5A

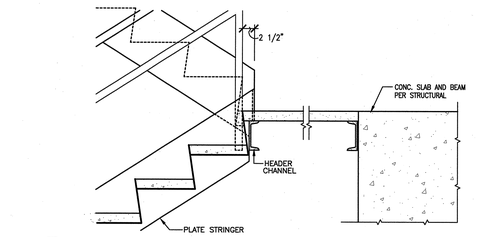

2 A5.30.35 LANDING DETAIL
SCALE: 1"=1'-0" ADT055503-5A

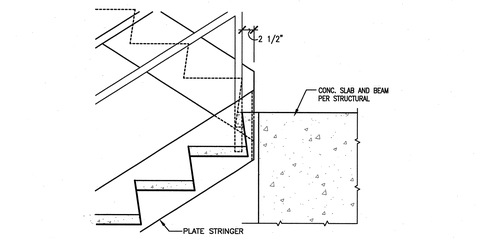

3 A5.30.35 LANDING DETAIL
SCALE: 1"=1'-0" ADT055503-5A

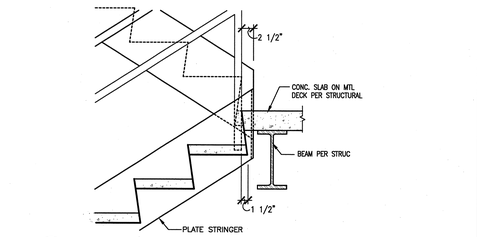

4 A5.30.35 LANDING DETAIL
SCALE: 1"=1'-0" ADT055503-5A

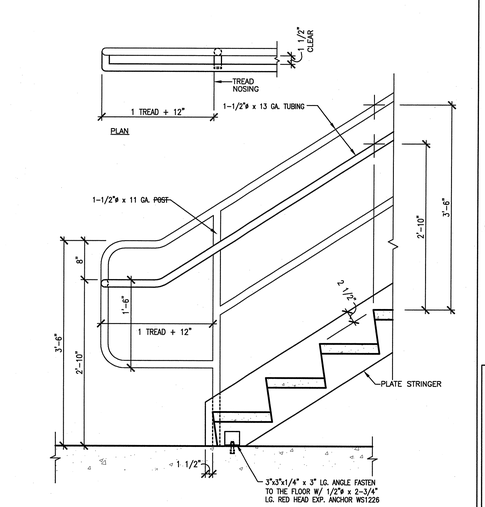

6 A5.30.35 STARTER RAIL DETAIL
SCALE: 1"=1'-0" ADT055001

108030700-A8E-8700-A108

Knight Jacobs
Knight/Jacobs Joint Venture
701 Scarboro Road, MS 8253
Oak Ridge, TN 37830
865-241-9433
fax 865-241-3400

KNIGHT
Knight Advanced Technology
343 West Randolph Street
Chicago, IL 60601

UT-BATTELLE
Oak Ridge National Laboratory
managed for the DEPARTMENT OF ENERGY under U.S. GOVERNMENT contract DE-AC05-00OR22725
UT-BATTELLE, LLC. © Oak Ridge, Tennessee

PROJECT NAME:
SPALLATION NEUTRON SOURCE
TARGET BUILDING
STAIR & GUARDRAIL SECTIONS

DSN	M. BRADLEY	10/26/01	
DRW	M. SICILIA	10/26/01	
CHK	E.DENSON	10/26/01	
DEPT			
PE		11/2/01	
PJ		11/13/01	
REQ			
UTB		11/13/01	

RPE: ROBERT L. BARNES, REGISTERED ARCHITECT, NO. 102104, STATE OF TENNESSEE, 26 OCT 01

DRAWING APPROVALS

1	48	49	50	PLANT	BLDG	FL	SH.	OF	TYPE	CLASS
3	A	X	X	8	8700		1	1	U	
51		52		53	WBS					REV
NC		NA			1.8.3.7		A5.30.35			0

REV	CHANGE TYPE	CHANGE CONTROL SYSTEM	CHANGE CONTROL NUMBER	DESCRIPTION	DSN	CHK	DEPT	DATE	PE	DATE	PJ	DATE	REQ	DATE	UTB	DATE	RPE	RPE NO	DATE	ST	CV	EC	EE	EM	IE	M	PD	SE	AR
0				CERTIFIED FOR CONSTRUCTION – 10/26/01	MBB	ED		8/2/01	11/2/01	8/2/01	11/13/01					11/13/01	RLB	102104	10/26/01	REW	–	WRS	AK	WRS	EWJ	–	MP	–	ED

REVISION OR ISSUE PURPOSE — REVISION APPROVALS — SQUAD CHECK

NO REPRESENTATION OR WARRANTY, EXPRESSED OR IMPLIED, IS MADE AS TO THE ACCURACY, COMPLETENESS OR USEFULNESS OF THE INFORMATION OR STATEMENTS CONTAINED IN THESE DRAWINGS, OR THAT THE USE OR DISCLOSURE OF ANY INFORMATION, APPARATUS, METHOD, OR PROCESS DISCLOSED IN THESE DRAWINGS MAY NOT INFRINGE PRIVATE RIGHTS OF OTHERS. NO LIABILITY IS ASSUMED WITH RESPECT TO THE USE OF, OR FOR DAMAGES RESULTING FROM THE USE OF ANY INFORMATION, APPARATUS, METHOD, OR PROCESS DISCLOSED IN THESE DRAWINGS. DRAWINGS MADE AVAILABLE FOR INFORMATION TO BIDDER ARE NOT TO BE USED FOR OTHER PURPOSES AND ARE TO BE RETURNED UPON REQUEST OF THE FORWARDING CONTRACTOR.

NUMBER OF SECTION OR DETAIL — DRAWING ON WHICH SECTION OR DETAIL IS SHOWN OR TAKEN
SECTION AND DETAIL KEY

THIS DOCUMENT CONTROLLED BY
CHANGE CONTROL SYSTEM 3
ENGINEERING PROCEDURE SNS-ENG-0001

Date: 10/25/2001 Time: 14:38:48
Username: DENSON
CD-F:\PROJFILES\ADT\MBB\R8_0400\WORK_SA\TAG_PLOT\A5-30-35.DWG