SHEET NOTES:

1. STEEL BM. TO BE 2 H FIRE RATED W/ INTUMESCENT THIN FILM FIREPROOFING
2. (–) REINFORCING MARK FOR CMU WALLS, SEE A9.30.32 FOR WALL MARK 2, CMU WALL TO SUPPORT HVAC PIPING, SEE MECH. DOORS. FOR LOCATION

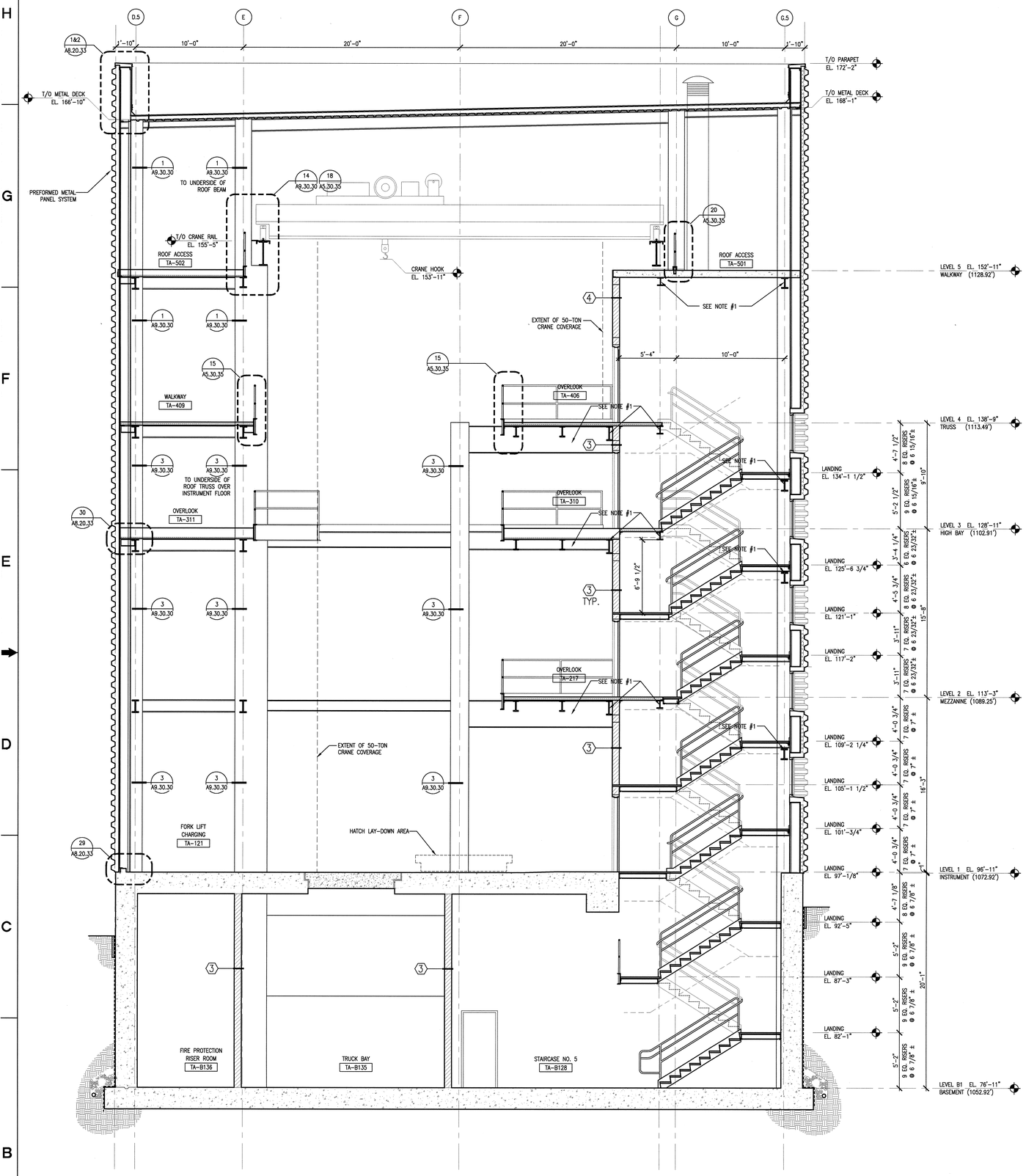

6 STAIR NO.5 SECTION
A5.30.32 SCALE: 1/4"=1'-0" AWS005-5A

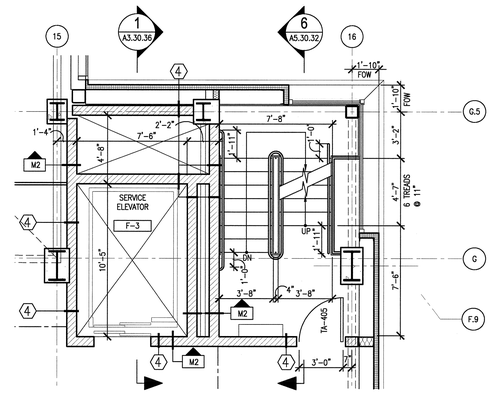

3 4 LEVEL STAIR NO.5 PLAN
A2.04.48 SCALE: 1/4"=1'-0" AWS007-5A

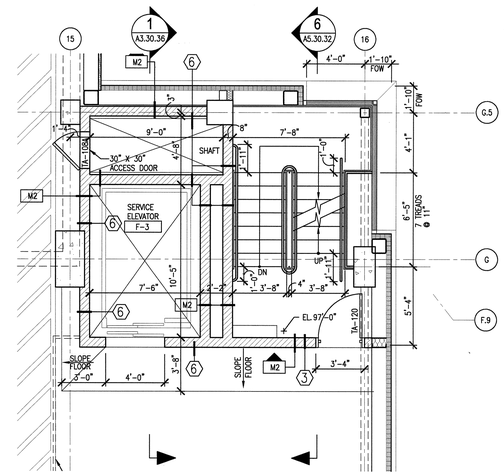

1 1 LEVEL STAIR NO.5 PLAN
A2.10.48 SCALE: 1/4"=1'-0" AWS007-5A

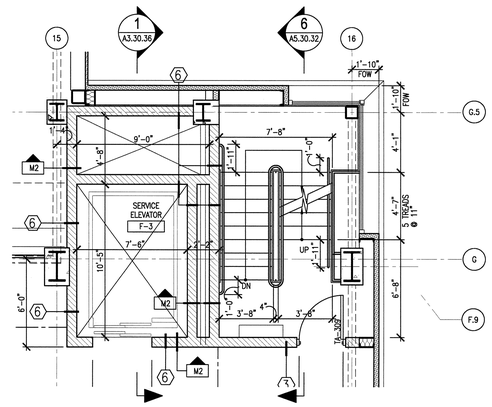

4 3 LEVEL STAIR NO.5 PLAN
A2.03.48 SCALE: 1/4"=1'-0" AWS007-5A

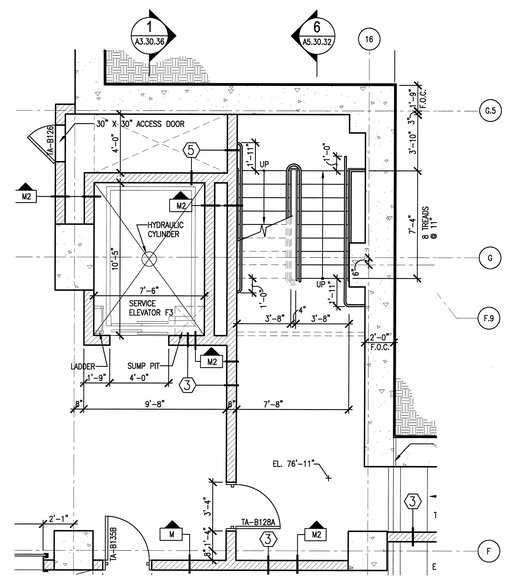

2 B1 LEVEL STAIR NO.5 PLAN
A2.81.48 SCALE: 1/4"=1'-0" AWS007-5A

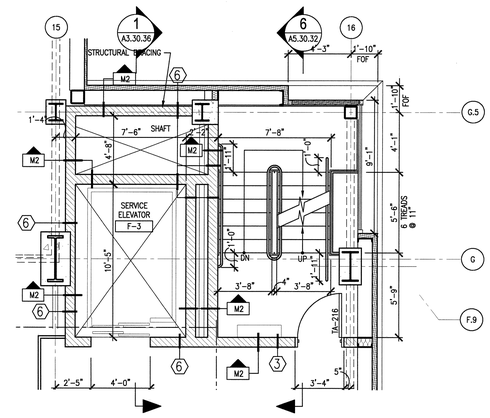

5 2 LEVEL STAIR NO.5 PLAN
A2.02.48 SCALE: 1/4"=1'-0" AWS007-5A

NO REPRESENTATION OR WARRANTY, EXPRESSED OR IMPLIED, IS MADE AS TO THE ACCURACY, COMPLETENESS OR USEFULNESS OF THE INFORMATION OR STATEMENTS CONTAINED IN THESE DRAWINGS, OR THAT THE USE OR DISCLOSURE OF ANY INFORMATION, APPARATUS, METHOD, OR PROCESS DISCLOSED IN THESE DRAWINGS MAY NOT INFRINGE PRIVATE RIGHTS OF OTHERS. NO LIABILITY IS ASSUMED WITH RESPECT TO THE USE OF, OR FOR DAMAGES RESULTING FROM THE USE OF ANY INFORMATION, APPARATUS, METHOD, OR PROCESS DISCLOSED IN THESE DRAWINGS. DRAWINGS MADE AVAILABLE FOR INFORMATION TO BIDDER ARE NOT TO BE USED FOR OTHER PURPOSES AND ARE TO BE RETURNED UPON REQUEST OF THE FORWARDING CONTRACTOR.

NUMBER OF SECTION OR DETAIL — DRAWING ON WHICH SECTION OR DETAIL IS SHOWN OR TAKEN

SECTION AND DETAIL KEY

THIS DOCUMENT CONTROLLED BY

CHANGE CONTROL SYSTEM 3

ENGINEERING PROCEDURE SNS-ENG-0001

REV	CHANGE TYPE	CHANGE CONTROL SYSTEM	CHANGE CONTROL NUMBER	DESCRIPTION	DSN	CHK	DEPT
0				CERTIFIED FOR CONSTRUCTION – 10/26/01	MBB	ED	

REVISION OR ISSUE PURPOSE

DATE	PE	DATE	PJ	DATE	REQ	DATE	UTB	DATE	RPE	RPE NO	DATE
11/13/01	RDP	11/14/01					11/14/01	RLB	102104	11/13/01	

REVISION APPROVALS

REW	–	WRS	AK	WRS	BWJ	–	MP	–	ED
ST	CV	EC	EE	EM	IE	M	PD	SE	AR

SQUAD CHECK

RPE — ROBERT L. BARNES, REGISTERED ARCHITECT, AD-102104, STATE OF TENNESSEE

REV. 0 DATE 11-13-01

DSN	M. BRADLEY	10/26/01
DRW	M. SICILIA	10/26/01
CHK	E.DENSON	10/26/01
DEPT		
PE	R.P. Denson	11/13/01
PJ	R.D. Dean	11/14/01
REQ		
UTB		11/14/01

DRAWING APPROVALS

108030700-A8E-8700-A104

Knight/Jacobs Joint Venture
701 Scarboro Road, MS 8253
Oak Ridge, TN 37830
865-241-9433
fax 865-241-3400

KNIGHT
Knight Advanced Technology
540 West Randolph Street
Chicago, IL 60661

UT-BATTELLE
Oak Ridge National Laboratory
managed for the DEPARTMENT OF ENERGY under U.S. GOVERNMENT contract DE-AC05-00OR22725
UT-BATTELLE, LLC. + Oak Ridge, Tennessee

PROJECT NAME:
SPALLATION NEUTRON SOURCE

TARGET BUILDING
STAIR NO. 5
PLANS & SECTION

1	48	49	50	PLANT	BLDG	FL	SH.	OF	TYPE	CLASS
3	A	X	X	8	8700		1	1		U

51	52	53		REV
NC	NA		A5.30.31	0

WBS 1.8.3.7

Date: 11/13/2001
Time: 13:51:05
Username: BRADM
C:\PJ2\PROJECTS\2005\05-0401\04A_SP\140_FLOT\A5-30-31.DWG

AutoCAD