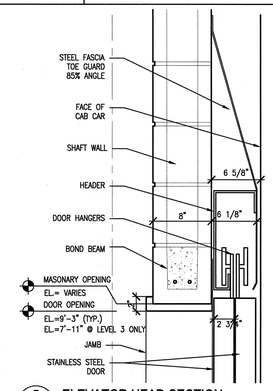

5 A3.30.36 ELEVATOR HEAD SECTION
SCALE: 1-1/2"=1'-0" ADT142001-5A

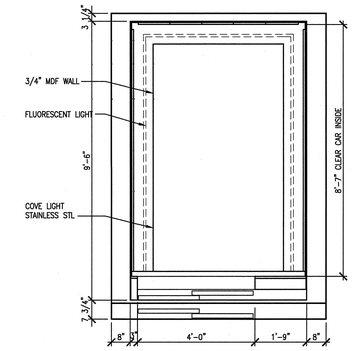

1 A5.20.33 ELEVATOR CAB F3- REFLECTED CEILING
SCALE: 1/2"=1'-0" AIE031-5A

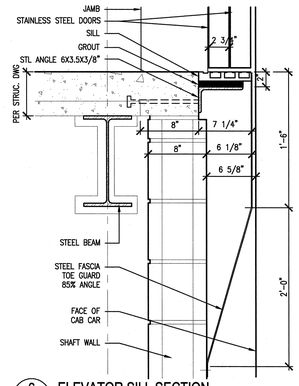

6 A3.30.36 ELEVATOR SILL SECTION
SCALE: 1-1/2"=1'-0" ADT142001-5A

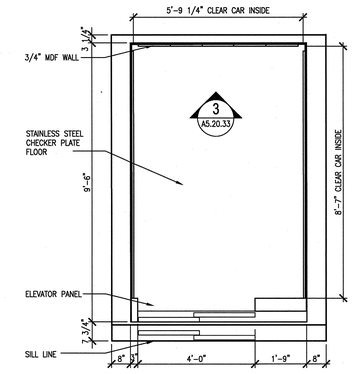

2 A5.20.33 ELEVATOR CAB F3-PLAN
SCALE: 1/2"=1'-0" AIE031-5A

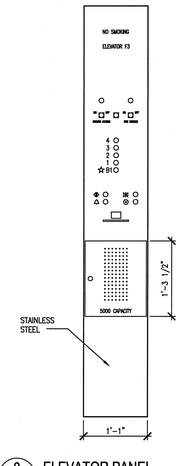

8 A5.20.33 ELEVATOR PANEL
SCALE: 1" = 1'- 0" ADT142007-5A

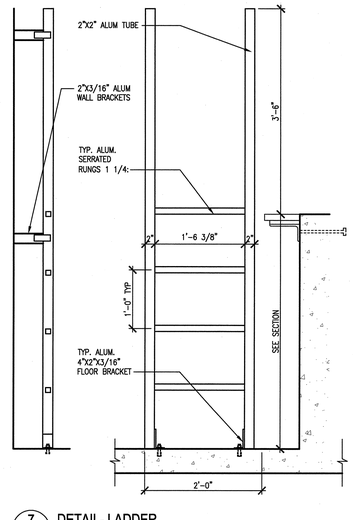

7 A5.20.33 DETAIL- LADDER
SCALE: 1" = 1'- 0" ADT055030-5A

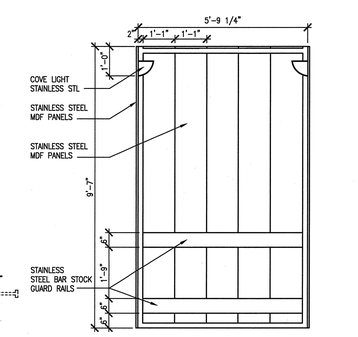

3 A5.20.33 ELEVATOR CAB F3-ELEVATION
SCALE: 1/2"=1'-0" AIE031-5A

4' 2' 0 4' 8'
SCALE: 1/4" = 1'-0"

108030700-A8E-8700-A102

Knight/Jacobs Joint Venture
701 Scarboro Road, MS 8253
Oak Ridge, TN 37830
865-241-9433
fax 865-241-3400

KNIGHT
Knight Advanced Technology
548 West Randolph Street
Chicago, IL 60661

NO REPRESENTATION OR WARRANTY, EXPRESSED OR IMPLIED, IS MADE AS TO THE ACCURACY, COMPLETENESS OR USEFULNESS OF THE INFORMATION OR STATEMENTS CONTAINED IN THESE DRAWINGS, OR THAT THE USE OR DISCLOSURE OF ANY INFORMATION, APPARATUS, METHOD, OR PROCESS DISCLOSED IN THESE DRAWINGS MAY NOT INFRINGE PRIVATE RIGHTS OF OTHERS. NO LIABILITY IS ASSUMED WITH RESPECT TO THE USE OF, OR FOR DAMAGES RESULTING FROM THE USE OF ANY INFORMATION, APPARATUS, METHOD, OR PROCESS DISCLOSED IN THESE DRAWINGS. DRAWINGS MADE AVAILABLE FOR INFORMATION TO BIDDER ARE NOT TO BE USED FOR OTHER PURPOSES AND ARE TO BE RETURNED UPON REQUEST OF THE FORWARDING CONTRACTOR.

NUMBER OF SECTION OR DETAIL
DRAWING ON WHICH SECTION OR DETAIL IS SHOWN OR TAKEN
SECTION AND DETAIL KEY

THIS DOCUMENT CONTROLLED BY
CHANGE CONTROL SYSTEM 3
ENGINEERING PROCEDURE SNS-ENG-G001

REV	CHANGE TYPE	CHANGE CONTROL SYSTEM	CHANGE REQUEST NUMBER	DESCRIPTION	DSN	CHK	DEPT
0				CERTIFIED FOR CONSTRUCTION - 10/26/01	MBB	ED	

REVISION OR ISSUE PURPOSE

DATE	PE	DATE	PJ	DATE	REQ	DATE	UTB	DATE	RPE	RPE NO	DATE
	RJB	11/5/01	RPD	11/26/01				11/13/01	RLB	102104	10/26/01

REVISION APPROVALS

REW	–	WRS	AK	WRS	EWJ	–	MP	–	ED
ST	CV	EC	EE	EM	IE	M	PD	SE	AR

SQUAD CHECK

RPE
ROBERT L. BARNES REGISTERED ARCHITECT STATE OF TENNESSEE NO. 102104
26OCT01

REV.	DATE

DRAWING APPROVALS

DSN	M. BRADLEY	10/26/01
DRW	A. GANDHI	10/26/01
CHK	E.DENSON	10/26/01
DEPT		
PE	R J Rasein	11/5/01
PJ	R D Dean	11/12/01
REQ		
UTB		11/13/01

UT-BATTELLE
Oak Ridge National Laboratory
managed for the DEPARTMENT OF ENERGY under U.S. GOVERNMENT contract DE-AC05-00OR22725
UT-BATTELLE, LLC. • Oak Ridge, Tennessee

PROJECT NAME:
SPALLATION NEUTRON SOURCE

TARGET BUILDING
ELEVATOR F3 PLANS
ELEVATIONS & DETAILS

1	48	49	50	PLANT	BLDG	FL	SH.	OF	TYPE	CLASS
3	A	X	X	8	8700		1	1	S	U
51		52		53	WBS					REV
NC		NA			1.8.3.7		A5.20.33			0

Date: 10/25/2001 Time: 14:54:42
Username: GANDHIA
CH-F:\PJDATA\BLDG700\700\700_D420\700_D420_SA\700_PLDT\A5-20-33.DWG

AutoCAD