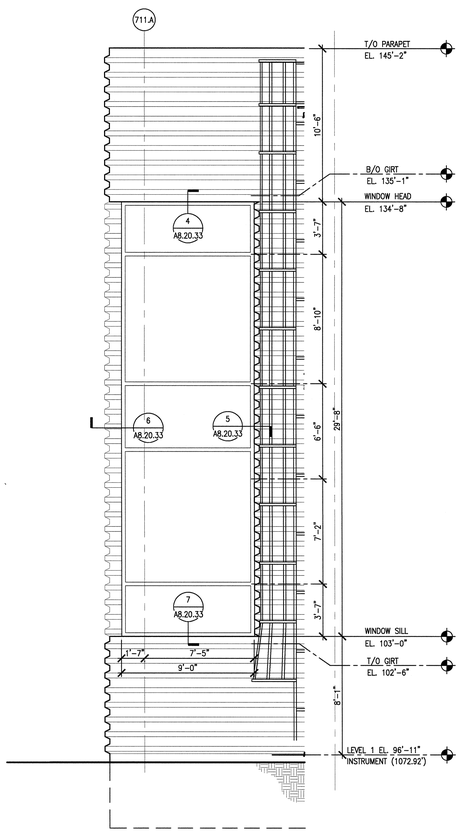

9 A3.10.33 — 11TU BUILDING- WEST ELEVATION WINDOW — AEL207-5A

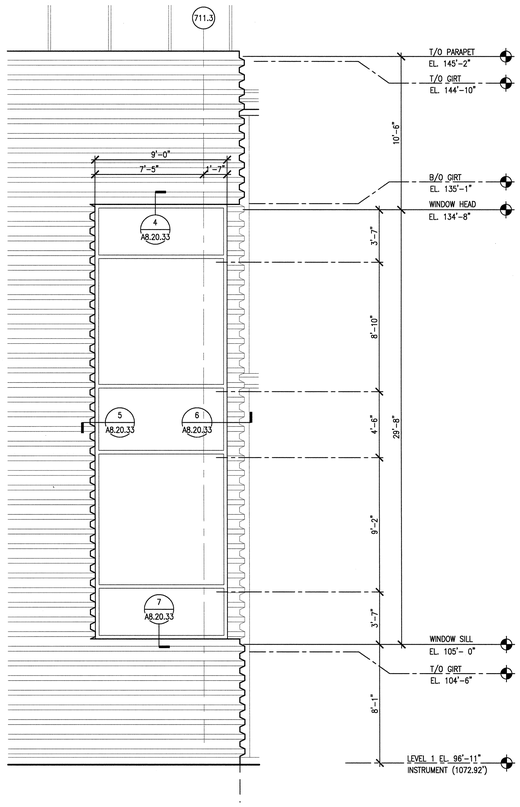

8 A3.10.33 — 11TU BUILDING- NORTH ELEVATION WINDOW — AEL207-5A

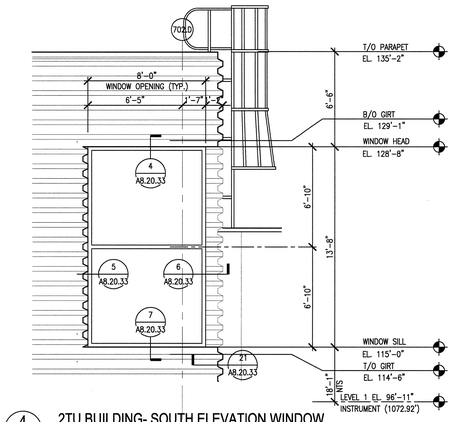

4 A3.10.32 — 2TU BUILDING- SOUTH ELEVATION WINDOW — AEL206-5A

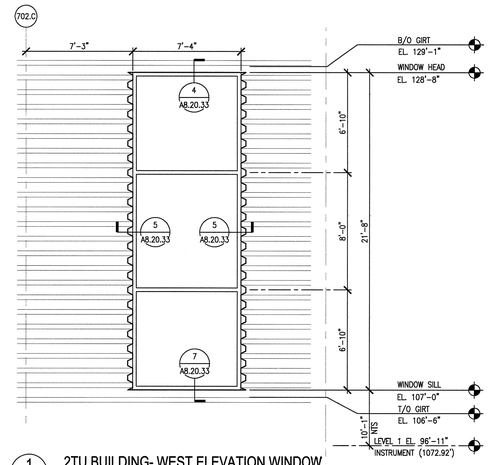

1 A3.10.32 — 2TU BUILDING- WEST ELEVATION WINDOW — SCALE: 1/4" = 1'-0" — AEL206-5A

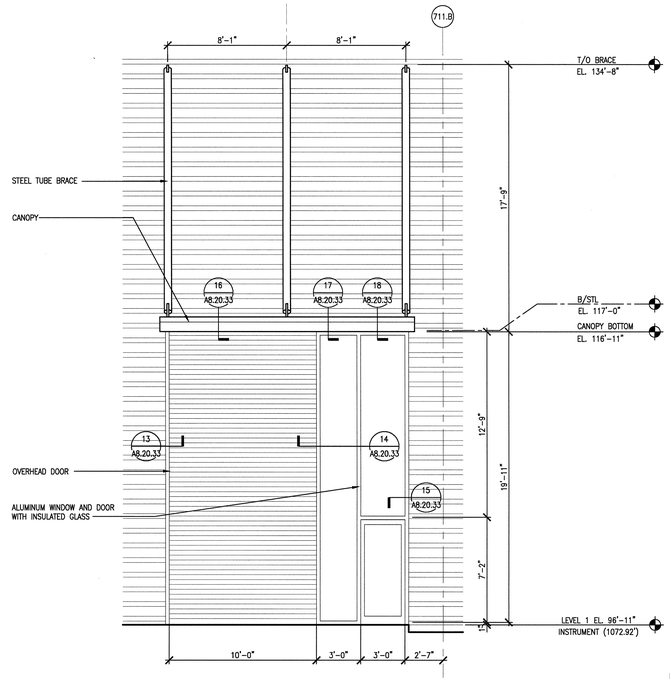

5 A3.10.33 — 11TU BUILDING- EAST ELEVATION ENTRANCE — AEL207-5A

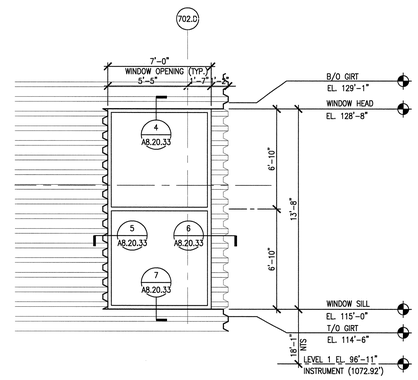

2 A3.10.32 — 2TU BUILDING- EAST ELEVATION WINDOW — SCALE: 1/4" = 1'-0" — AEL206-5A

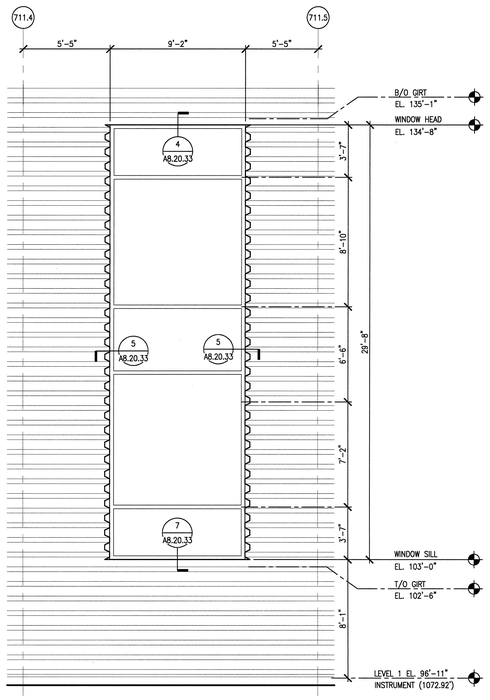

10 A3.10.33 — 11TU BUILDING- SOUTH ELEVATION WINDOW — AEL207-5A

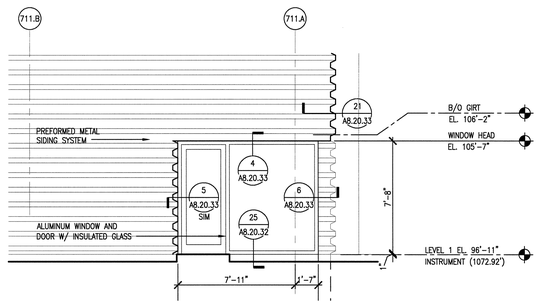

7 A3.10.33 — 11TU BUILDING- NORTH ELEVATION WINDOW — AEL207-5A

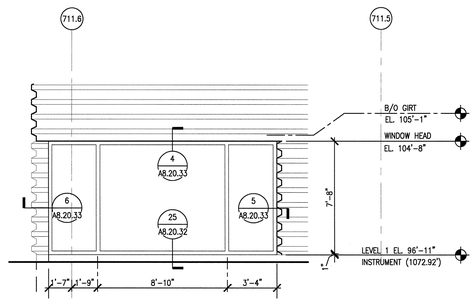

6 A3.10.33 — 11TU BUILDING- EAST ELEVATION WINDOW — AEL207-5A

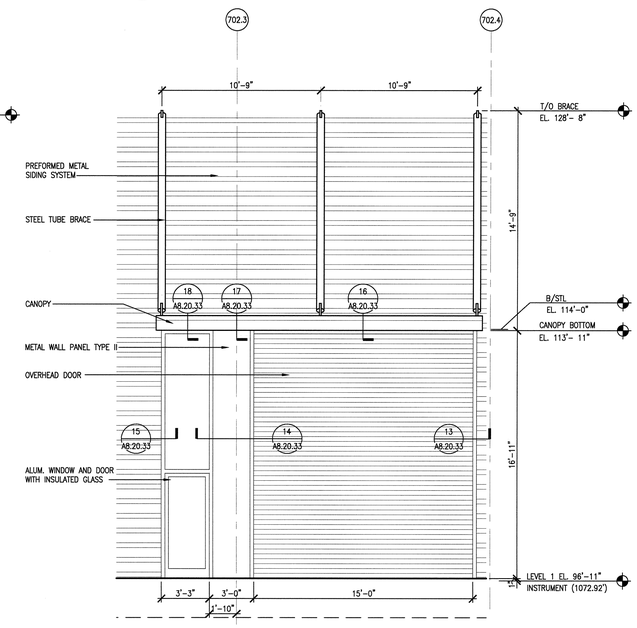

3 A3.10.32 — 2TU BUILDING- SOUTH ELEVATION ENTRANCE — SCALE: 1/4" = 1'-0" — AEL206-5A

108030700-A8E-8000-A001

Knight/Jacobs Joint Venture
701 Scarboro Road, MS 8253
Oak Ridge, TN 37830
865-241-9433
fax 865-241-3400

KNIGHT
Knight Advanced Technology
548 West Randolph Street
Chicago, IL 60661

Oak Ridge National Laboratory
managed for the DEPARTMENT OF ENERGY under
U.S. GOVERNMENT contract DE-AC05-00OR22725
UT-BATTELLE, LLC, • Oak Ridge, Tennessee

DSN	M. BRADLEY	10/26/01
DRW	M. GRANADOS	10/26/01
CHK	E.DENSON	10/26/01
DEPT		
PE		11/13/01
PJ		11/14/01
REQ		
UTB		11/14/01

RPE: ROBERT L. BARNES, REGISTERED ARCHITECT, NO. 102104, STATE OF TENNESSEE

REV. 0 DATE 11-13-01

DRAWING APPROVALS

PROJECT NAME:
SPALLATION NEUTRON SOURCE
2TU AND 11TU BUILDING
ENLARGED EXTERIOR ELEVATIONS

1	48	49	50	PLANT	BLDG	FL	SH.	OF	TYPE	CLASS
3	A	X	X	8	8000		1	1	S	U
51		52		53	WBS		A3.40.32			REV
NC		NA			1.8.3.7					0

REV	CHANGE TYPE	CHANGE CONTROL SYSTEM	CHANGE REQUEST NUMBER	DESCRIPTION	DSN	CHK	DEPT
0				CERTIFIED FOR CONSTRUCTION – 10/26/01	MBB	ED	

REVISION OR ISSUE PURPOSE

DATE	PE	DATE	PJ	DATE	REQ	DATE	UTB	DATE	RPE	RPE NO	DATE
	11/13/01		RAD 11/14/01				11/14/01		RLB	102104	11/13/01

REVISION APPROVALS

REW	–	WRS	AK	WRS	BWJ	–	MP	–	ED
ST	CV	EC	EE	EM	IE	M	PD	SE	AR

SQUAD CHECK

NO REPRESENTATION OR WARRANTY, EXPRESSED OR IMPLIED, IS MADE AS TO THE ACCURACY, COMPLETENESS OR USEFULNESS OF THE INFORMATION OR STATEMENTS CONTAINED IN THESE DRAWINGS, OR THAT THE USE OR DISCLOSURE OF ANY INFORMATION, APPARATUS, METHOD, OR PROCESS DISCLOSED IN THESE DRAWINGS MAY NOT INFRINGE PRIVATE RIGHTS OF OTHERS. NO LIABILITY IS ASSUMED WITH RESPECT TO THE USE OF, OR FOR DAMAGES RESULTING FROM THE USE OF ANY INFORMATION, APPARATUS, METHOD, OR PROCESS DISCLOSED IN THESE DRAWINGS. DRAWINGS MADE AVAILABLE FOR INFORMATION TO BIDDER ARE NOT TO BE USED FOR OTHER PURPOSES AND ARE TO BE RETURNED UPON REQUEST OF THE FORWARDING CONTRACTOR.

NUMBER OF SECTION OR DETAIL
DRAWING ON WHICH SECTION OR DETAIL IS SHOWN OR TAKEN
SECTION AND DETAIL KEY

THIS DOCUMENT CONTROLLED BY
CHANGE CONTROL SYSTEM 3
ENGINEERING PROCEDURE SNS-ENG-0001

AutoCAD
Date: 11/13/2001 Time: 13:37:54
Drawing: MARDALEXG
CR-F:\PROJPROJECTS\WO700_CNDR\DGN_SA\740_PLOT\A3-40-32.DWG