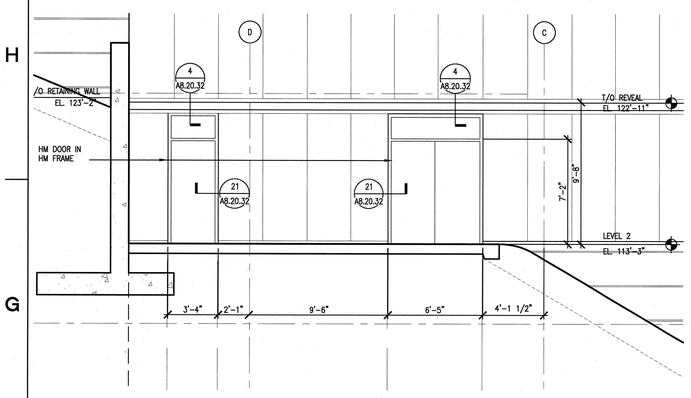

9 A3.10.31 PARTIAL WEST ELEVATION - DOOR
SCALE: 1/4" = 1'-0" AEL105-5A

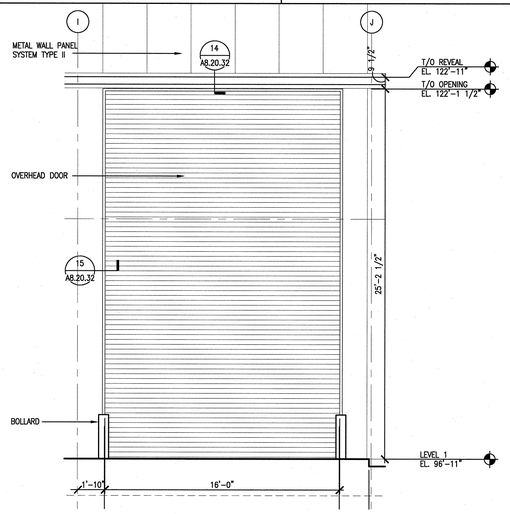

7 A3.10.30 PARTIAL EAST ELEVATION - OVER HEAD DOOR
SCALE: 1/4" = 1'-0" AEL104-5A

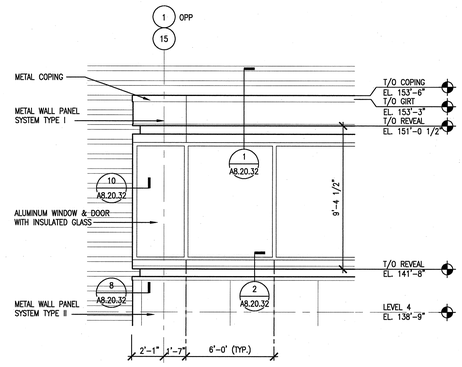

4 A3.10.30 PARTIAL NORTH AND SOUTH ELEVATION - WINDOWS
SCALE: 1/4" = 1'-0" AEL104-5A

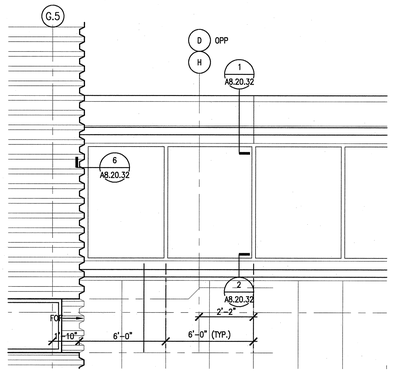

2 A3.10.30 PARTIAL EAST AND WEST ELEVATION - WINDOWS
SCALE: 1/4" = 1'-0" AEL104-5A

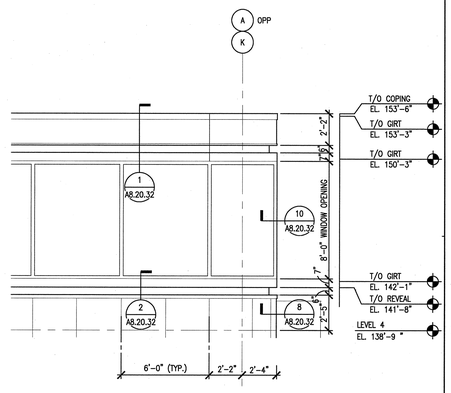

1 A3.10.30 PARTIAL EAST AND WEST ELEVATION - WINDOWS
SCALE: 1/4" = 1'-0" AEL104-5A

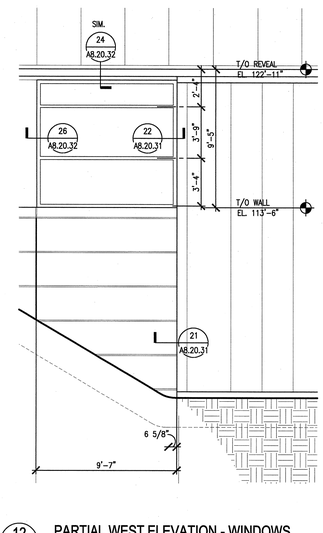

12 A3.10.31 PARTIAL WEST ELEVATION - WINDOWS
SCALE: 1/4" = 1'-0" AEL105-5A

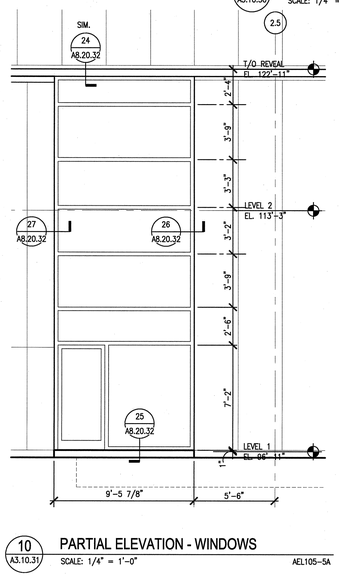

10 A3.10.31 PARTIAL ELEVATION - WINDOWS
SCALE: 1/4" = 1'-0" AEL105-5A

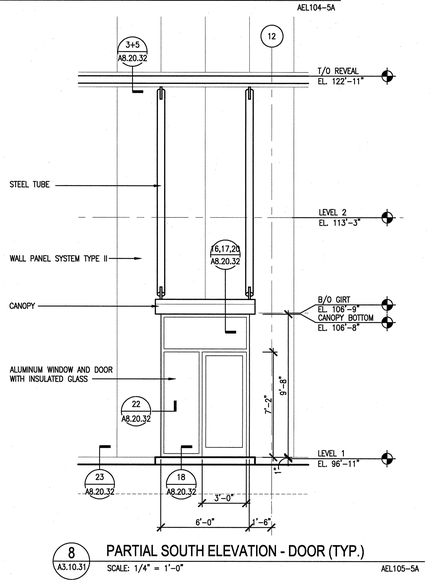

8 A3.10.31 PARTIAL SOUTH ELEVATION - DOOR (TYP.)
SCALE: 1/4" = 1'-0" AEL105-5A

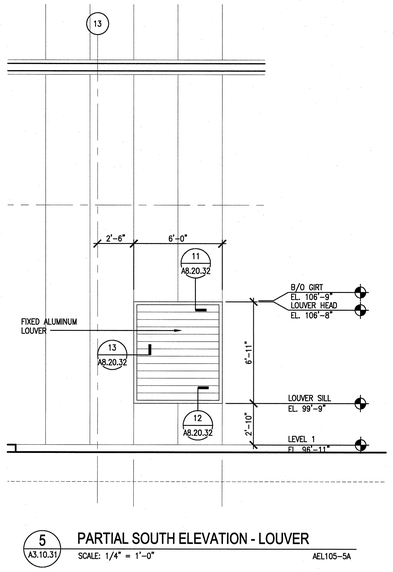

5 A3.10.31 PARTIAL SOUTH ELEVATION - LOUVER
SCALE: 1/4" = 1'-0" AEL105-5A

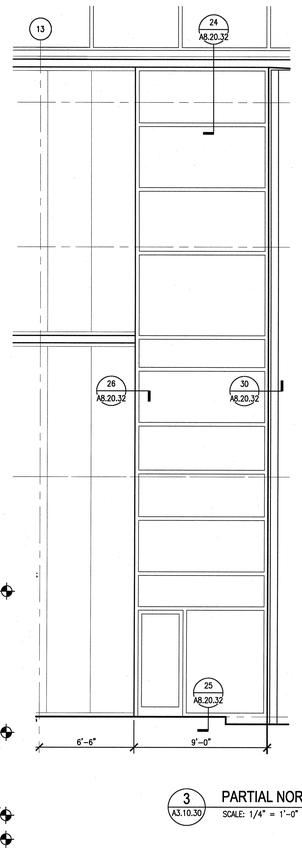

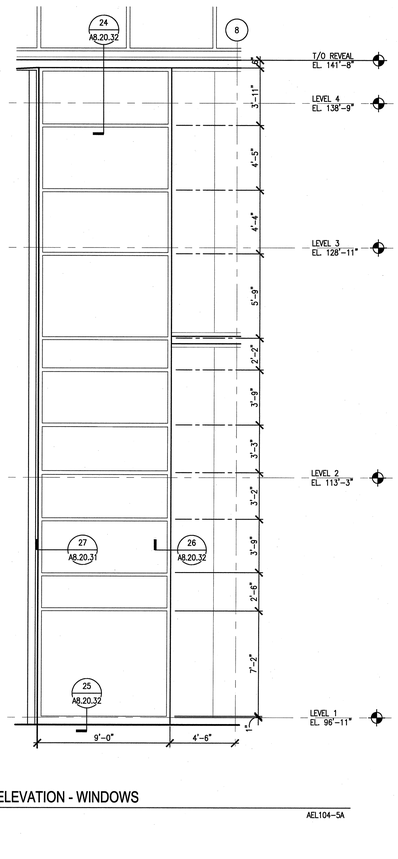

3 A3.10.30 PARTIAL NORTH ELEVATION - WINDOWS
SCALE: 1/4" = 1'-0" AEL104-5A

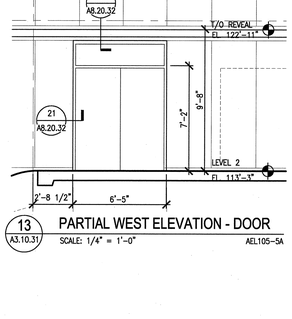

13 A3.10.31 PARTIAL WEST ELEVATION - DOOR
SCALE: 1/4" = 1'-0" AEL105-5A

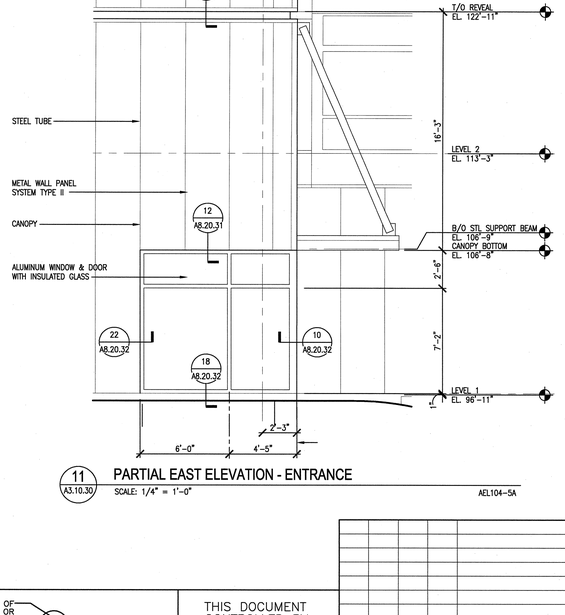

11 A3.10.30 PARTIAL EAST ELEVATION - ENTRANCE
SCALE: 1/4" = 1'-0" AEL104-5A

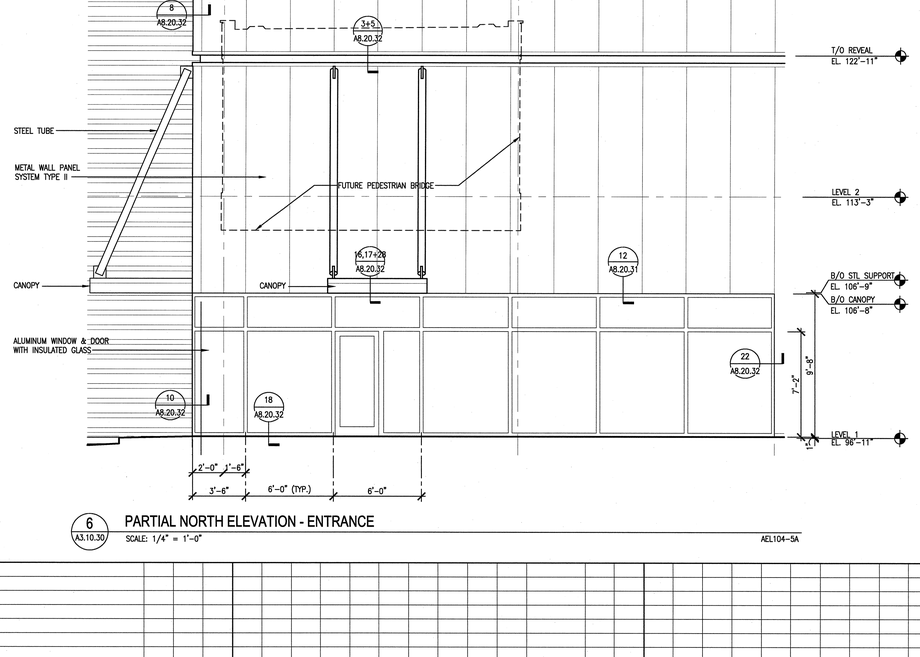

6 A3.10.30 PARTIAL NORTH ELEVATION - ENTRANCE
SCALE: 1/4" = 1'-0" AEL104-5A

NO REPRESENTATION OR WARRANTY, EXPRESSED OR IMPLIED, IS MADE AS TO THE ACCURACY, COMPLETENESS OR USEFULNESS OF THE INFORMATION OR STATEMENTS CONTAINED IN THESE DRAWINGS, OR THAT THE USE OR DISCLOSURE OF ANY INFORMATION, APPARATUS, METHOD, OR PROCESS DISCLOSED IN THESE DRAWINGS MAY NOT INFRINGE PRIVATE RIGHTS OF OTHERS. NO LIABILITY IS ASSUMED WITH RESPECT TO THE USE OF, OR FOR DAMAGES RESULTING FROM THE USE OF ANY INFORMATION, APPARATUS, METHOD, OR PROCESS DISCLOSED IN THESE DRAWINGS. DRAWINGS MADE AVAILABLE FOR INFORMATION TO BIDDER ARE NOT TO BE USED FOR OTHER PURPOSES AND ARE TO BE RETURNED UPON REQUEST OF THE FORWARDING CONTRACTOR.

NUMBER OF SECTION OR DETAIL
DRAWING ON WHICH SECTION OR DETAIL IS SHOWN OR TAKEN
SECTION AND DETAIL KEY

THIS DOCUMENT CONTROLLED BY
CHANGE CONTROL SYSTEM 3
ENGINEERING PROCEDURE SNS-ENG-G001

REV	CHANGE TYPE	CHANGE CONTROL SYSTEM	CHANGE REQUEST NUMBER	DESCRIPTION	DSN	CHK	DEPT
0				CERTIFIED FOR CONSTRUCTION – 10/26/01	MBB	ED	

REVISION OR ISSUE PURPOSE

DATE	PE	DATE	PJ	DATE	REQ	DATE	UTB	DATE	RPE	RPE NO	DATE
	10/25/01	10/25/01	KAD	10/26/01				10/26/01	RLB	102104	10/26/01

REVISION APPROVALS

REW	–	WRS	AK	WRS	BWJ	–	MP	–	ED
ST	CV	EC	EE	EM	IE	M	PD	SE	AR

SQUAD CHECK

RPE
ROBERT L. BARNES REGISTERED ARCHITECT ARCHITECT 102104 STATE OF TENNESSEE
20010
REV. DATE

DSN	M. BRADLEY	10/26/01
DRW	I. WANG	10/26/01
CHK	E.DENSON	10/26/01
DEPT		
PE	R.L. Barnes	10/25/01
PJ	K.D. Dean	10/25/01
REQ		
UTB	M. Faulkner	10/26/01

DRAWING APPROVALS

108030700-A8E-8700-A098

Knight Jacobs
KnightJacobs Joint Venture
701 Scarboro Road, MS 8253
Oak Ridge, TN 37830
865-241-9433
fax 865-241-3400

KNIGHT
Knight Advanced Technology
549 West Randolph Street
Chicago, IL 60661

UT-BATTELLE
Oak Ridge National Laboratory
managed for the DEPARTMENT OF ENERGY under
U.S. GOVERNMENT contract DE-AC05-00OR22725
UT-BATTELLE, LLC, + Oak Ridge, Tennessee

PROJECT NAME:
SPALLATION NEUTRON SOURCE
TARGET BUILDING
ENLARGED EXTERIOR ELEVATIONS

1	48	49	50	PLANT	BLDG	FL	SH.	OF	TYPE	CLASS
3	A	X	X	8	8700		1	1	S	U
		51	52	53	WBS					REV
		NC	NA		1.8.3.7		A3.40.31			0

Date: 10/25/2001 Time: 14:36:33
Username: DEDENSO
C:\R12_PROJECTS\1000\700_OSED\SNS_SA\140_FLOT\A3-40-31.DWG
AutoCAD