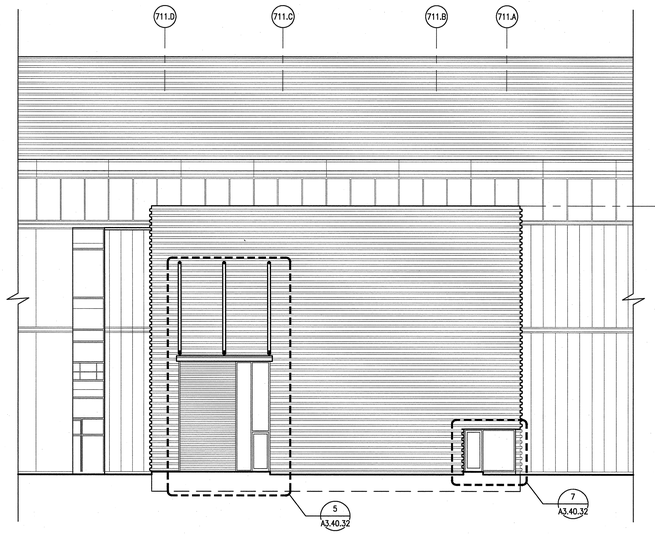

3 A1.01.32 **11TU BUILDING EAST ELEVATION**
SCALE: 3/32"=1'-0"
AEL107-5A

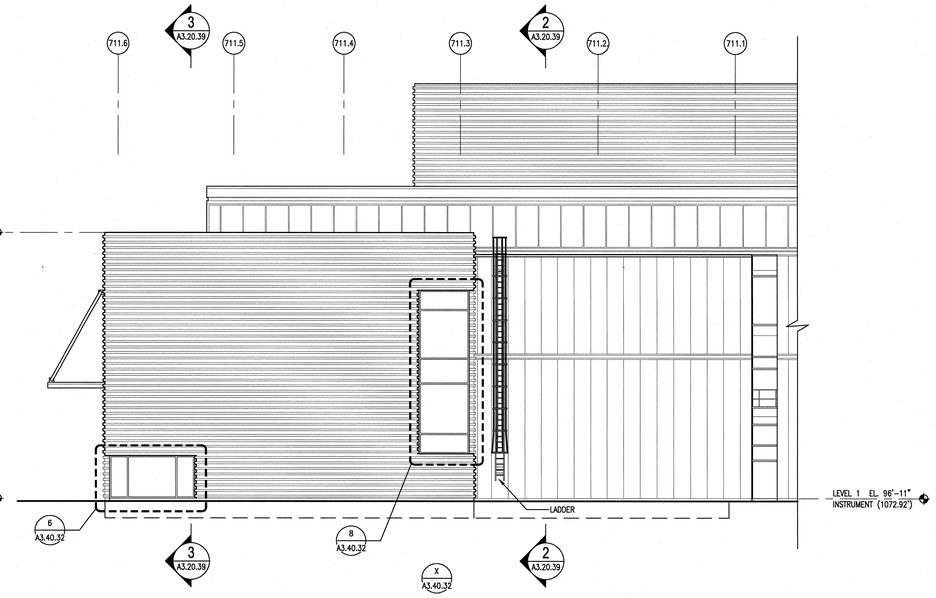

1 A1.01.32 **11TU BUILDING NORTH ELEVATION**
SCALE: 3/32"=1'-0"
AEL107-5A

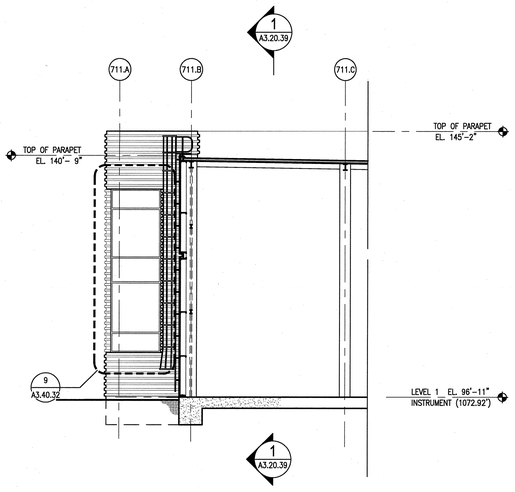

4 A1.01.32 **11TU BUILDING WEST ELEVATION**
SCALE: 3/32"=1'-0"
AEL107-5A

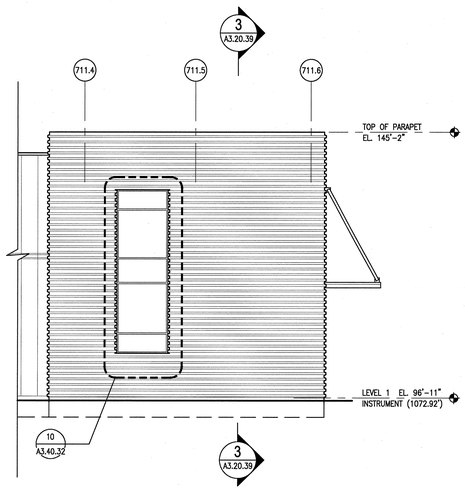

2 A1.01.32 **11TU BUILDING SOUTH ELEVATION**
SCALE: 3/32"=1'-0"
AEL107-5A

NO REPRESENTATION OR WARRANTY, EXPRESSED OR IMPLIED, IS MADE AS TO THE ACCURACY, COMPLETENESS OR USEFULNESS OF THE INFORMATION OR STATEMENTS CONTAINED IN THESE DRAWINGS, OR THAT THE USE OR DISCLOSURE OF ANY INFORMATION, APPARATUS, METHOD, OR PROCESS DISCLOSED IN THESE DRAWINGS MAY NOT INFRINGE PRIVATE RIGHTS OF OTHERS. NO LIABILITY IS ASSUMED WITH RESPECT TO THE USE OF, OR FOR DAMAGES RESULTING FROM THE USE OF ANY INFORMATION, APPARATUS, METHOD, OR PROCESS DISCLOSED IN THESE DRAWINGS. DRAWINGS MADE AVAILABLE FOR INFORMATION TO BIDDER ARE NOT TO BE USED FOR OTHER PURPOSES AND ARE TO BE RETURNED UPON REQUEST OF THE FORWARDING CONTRACTOR.

NUMBER OF SECTION OR DETAIL
DRAWING ON WHICH SECTION OR DETAIL IS SHOWN OR TAKEN
SECTION AND DETAIL KEY

THIS DOCUMENT CONTROLLED BY
CHANGE CONTROL SYSTEM 3
ENGINEERING PROCEDURE SNS-ENG-0001

REV	CHANGE TYPE	CHANGE CONTROL SYSTEM	CHANGE CONTROL NUMBER	DESCRIPTION	DSN	CHK	DEPT
0				CERTIFIED FOR CONSTRUCTION – 10/26/01	MBB	ED	

REVISION OR ISSUE PURPOSE

DATE	PE	DATE	PJ	DATE	REQ	DATE	UTB	DATE	RPE	RPE NO	DATE
11/13/01		11/13/01		11/13/01				11/13/01	RLB	102104	10/26/01

REVISION APPROVALS

REW	–	WRS	AK	WRS	BWJ	–	MP	–	ED
ST	CV	EC	EE	EM	IE	M	PD	SE	AR

SQUAD CHECK

RPE
ROBERT L. BARNES REGISTERED ARCHITECT No. 102104 STATE OF TENNESSEE
25 OCT 01
REV. DATE

DSN	M. BRADLEY	10/26/01
DRW	M. GRANADOS	10/26/01
CHK	E.DENSON	10/26/01
DEPT		
PE	E. Denson	11/13/01
PJ	R.A. Dean	11/13/01
REQ		
UTB	D. Faulkner	11/13/01

DRAWING APPROVALS

108030700-A8E-8711-A004

Knight/Jacobs Joint Venture
701 Scarboro Road, MS 8253
Oak Ridge, TN 37830
865-241-9433
fax 865-241-3400

KNIGHT
Knight Advanced Technology
540 West Randolph Street
Chicago, IL 60661

UT-BATTELLE
Oak Ridge National Laboratory
managed for the DEPARTMENT OF ENERGY under U.S. GOVERNMENT contract DE-AC05-00OR22725
UT-BATTELLE, LLC. • Oak Ridge, Tennessee

PROJECT NAME:
SPALLATION NEUTRON SOURCE

11TU BUILDING EXTERIOR ELEVATIONS

1	48	49	50	PLANT	BLDG	FL	SH.	OF	TYPE	CLASS
3	A	X	X	8	8711		1	1	S	U
51		52		53	WBS					REV
NC		NA			1.8.3.7		A3.10.33			0

Date: 10/25/2001 Time: 14:39:17
Drawn name: SRDJAMES
File name: U:\SLDPROJECTS\SNS\700_CAD\SNSA_SA\143_PLOT\A3-10-33.DWG

AutoCAD