SHEET NOTES:

1. LEVEL B1 FLOOR ELEVATION AND HIGH POINT OF RIDGE LINE OF SLOPE FLOOR AREA IS 76'-11" (1052.92')
2. FOR ROOM FINISH SCHEDULE, REFER TO A7.10.30
3. FOR WALL AND PARTITION SCHEDULE, REFER TO A7.20.30
4. FOR DOOR SCHEDULE, REFER TO A9.30.30
5. (FE) FIRE EXTINGUISHER
6. FACE OF CMU WALLS TO ALIGN WITH ADJACENT CONCRETE WALLS OR COLUMNS.
7. (—) REINFORCING MARK FOR CMU WALLS, SEE A9.30.32 FOR WALL MARK 2, CMU WALL TO SUPPORT HVAC PIPING, SEE MECH. DOORS. FOR LOCATION

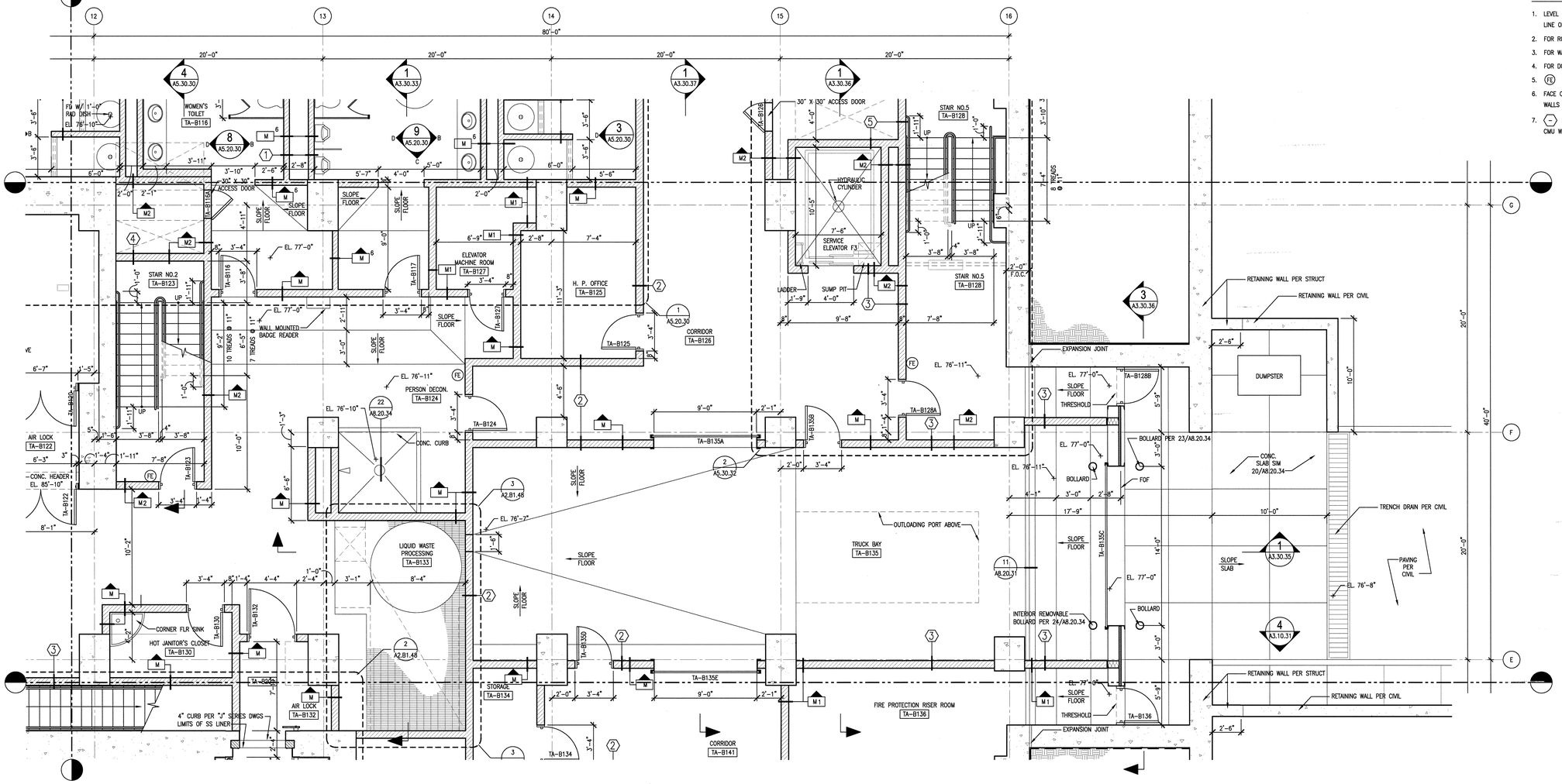

1 A2.B1.48 SECTOR 48, LEVEL B1 FLOOR PLAN
SCALE: 1/4"=1'-0"
AFPB10-5A

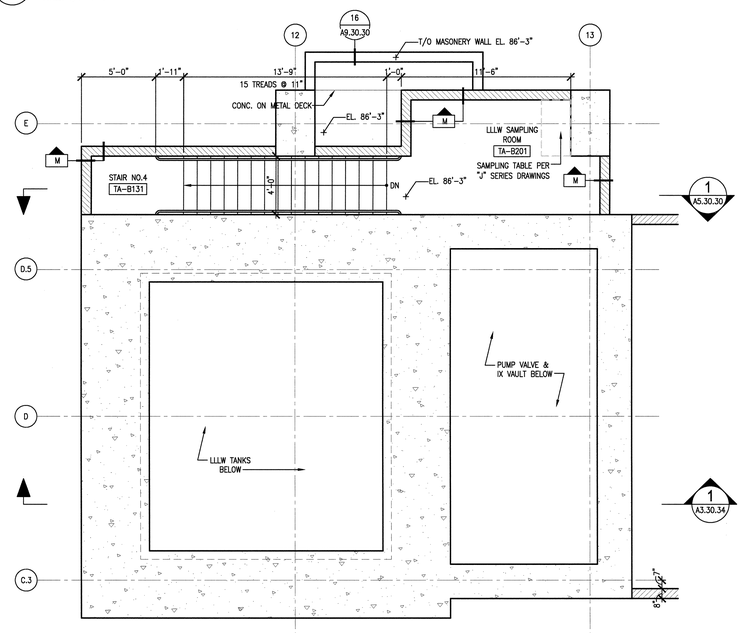

2 A2.B1.46 MEZZANINE & STAIR FLOOR PLAN
SCALE: 1/4"=1'-0"
AFPB20-5A

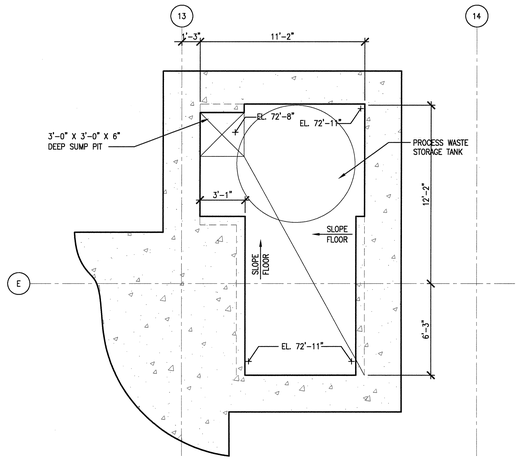

3 A2.B1.48 PROCESS WASTE STORAGE TANK PIT
SCALE: 1/4"=1'-0"
AFPB20-5A

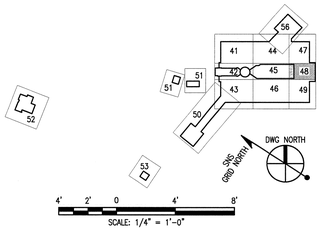

108030700-A8E-8700-A070

Knight/Jacobs Joint Venture
701 Scarboro Road, MS 8253
Oak Ridge, TN 37830
865-241-9433
fax 865-241-3400

KNIGHT
Knight Advanced Technology
540 West Randolph Street
Chicago, IL 60661

Oak Ridge National Laboratory
managed for the DEPARTMENT OF ENERGY under
U.S. GOVERNMENT contract DE-AC05-00OR22725
UT-BATTELLE, LLC. • Oak Ridge, Tennessee

PROJECT NAME:
SPALLATION NEUTRON SOURCE
TARGET BUILDING
FLOOR PLANS, BASEMENT
LEVEL B1, SECTOR 48 & MEZZANINE

1	48	49	50	PLANT	BLDG	FL	SH.	OF	TYPE	CLASS
3	A	X	X	8	8700		1	1	P	U
51		52		53	WBS					REV
NC		NA			1.8.3.7		A2.B1.48			0

DSN	M. BRADLEY	10/26/01
DRW	M. SICILIA	10/26/01
CHK	E.DENSON	10/26/01
DEPT		
PE	R.A. Dean	11/14/01
PJ	R.A. Dean	11/14/01
REQ		
UTB		11/14/01

RPE: ROBERT L. BARNES, REGISTERED APPROVED PROFESSIONAL ENGINEER, NO. 102104, STATE OF TENNESSEE
REV. 0 DATE 11-13-01

DRAWING APPROVALS

REV	CHANGE TYPE	CHANGE CONTROL SYSTEM	CHANGE REQUEST NUMBER	DESCRIPTION	DSN	CHK	DEPT
0				CERTIFIED FOR CONSTRUCTION – 10/26/01	MBB	ED	

REVISION OR ISSUE PURPOSE

DATE	PE	DATE	PJ	DATE	REQ	DATE	UTB	DATE	RPE	RPE NO	DATE
	11/15/01	11/14/01	RAD	11/14/01		11/14/01		11/14/01	RLB	102104	11/13/01

REVISION APPROVALS

REW	–	WRS	AK	WRS	BWJ	–	MP	–	ED
ST	CV	EC	EE	EM	IE	M	PD	SE	AR

SQUAD CHECK

NO REPRESENTATION OR WARRANTY, EXPRESSED OR IMPLIED, IS MADE AS TO THE ACCURACY, COMPLETENESS OR USEFULNESS OF THE INFORMATION OR STATEMENTS CONTAINED IN THESE DRAWINGS, OR THAT THE USE OR DISCLOSURE OF ANY INFORMATION, APPARATUS, METHOD, OR PROCESS DISCLOSED IN THESE DRAWINGS MAY NOT INFRINGE PRIVATE RIGHTS OF OTHERS. NO LIABILITY IS ASSUMED WITH RESPECT TO THE USE OF, OR FOR DAMAGES RESULTING FROM THE USE OF ANY INFORMATION, APPARATUS, METHOD, OR PROCESS DISCLOSED IN THESE DRAWINGS. DRAWINGS MADE AVAILABLE FOR INFORMATION TO BIDDER ARE NOT TO BE USED FOR OTHER PURPOSES AND ARE TO BE RETURNED UPON REQUEST OF THE FORWARDING CONTRACTOR.

NUMBER OF SECTION OR DETAIL
DRAWING ON WHICH SECTION OR DETAIL IS SHOWN OR TAKEN
SECTION AND DETAIL KEY

THIS DOCUMENT CONTROLLED BY
CHANGE CONTROL SYSTEM 3
ENGINEERING PROCEDURE SNS-ENG-G001

Date: 10/26/2001 Time: 12:00:41
Username: BRADLEYMB
CH-F:\WILDFIRE\ETC\1000\700_0001\700_A8E\740_FLOT\A2-B1-48.DWG

AutoCAD