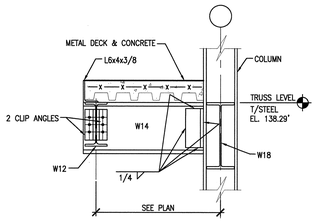

11 S2.04.43 SECTION
SCALE: 3/4"=1'-0" SDT051015-5A

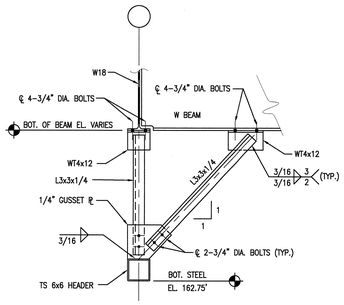

7 S5.10.37 SECTION
SCALE: 3/4"=1'-0" SDT051015-5A

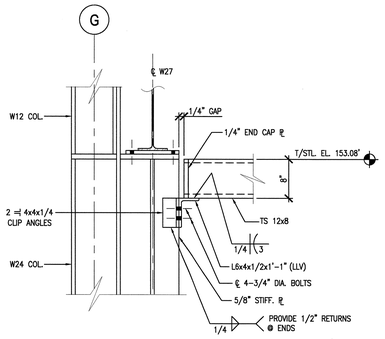

12 – TYPICAL DETAIL
SCALE : 1"=1'-0" SDT051034-5A

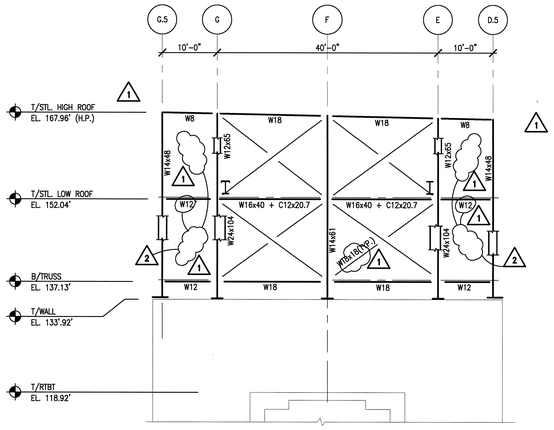

8 S2.04.42 ELEVATION AT COL. LINE 0.6 (LOOKING EAST)
SCALE: 3/32"=1'-0" SEL004-5A

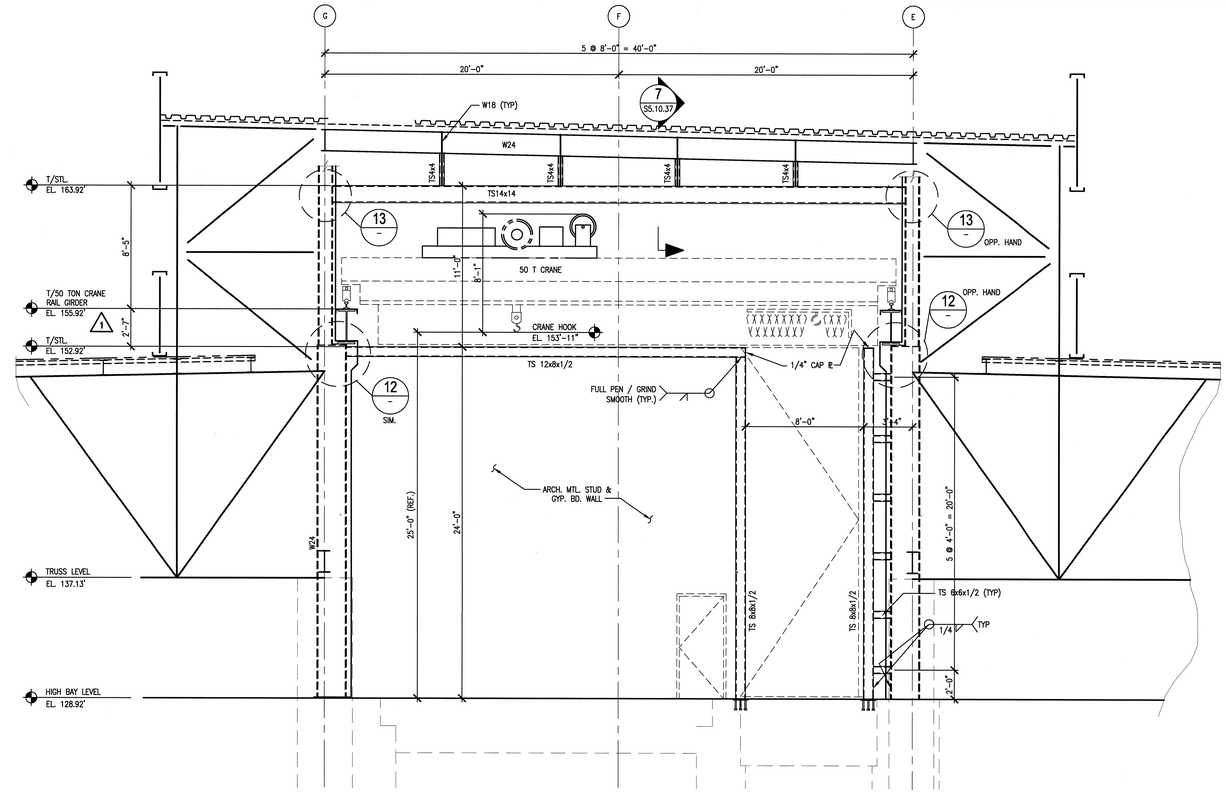

1 S2.09.45 INTERIOR FRAMING ELEVATION @ COLUMN LINE 11 (12 SIM)
SCALE: 1/4"=1'-0" SDT051010-5A
S2.09.48

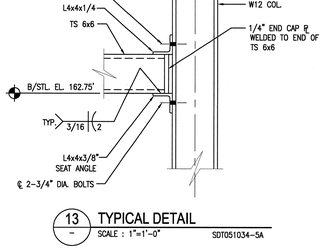

13 – TYPICAL DETAIL
SCALE : 1"=1'-0" SDT051034-5A

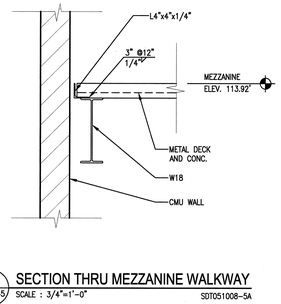

9 S2.02.45 SECTION THRU MEZZANINE WALKWAY
SCALE : 3/4"=1'-0" SDT051008-5A

S2.09.41
S2.09.42
S2.09.43

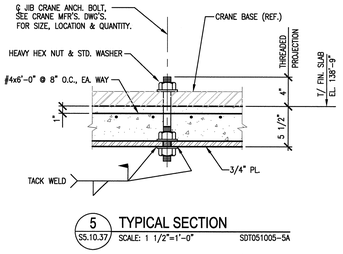

5 S5.10.37 TYPICAL SECTION
SCALE: 1 1/2"=1'-0" SDT051005-5A

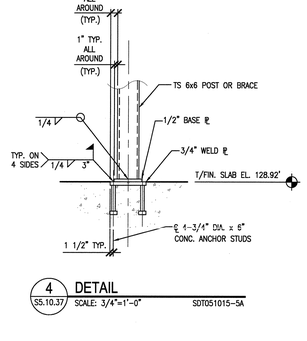

4 S5.10.37 DETAIL
SCALE: 3/4"=1'-0" SDT051015-5A

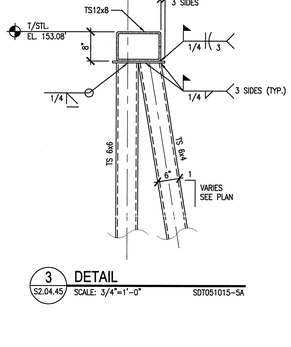

3 S2.04.45 DETAIL
SCALE: 3/4"=1'-0" SDT051015-5A

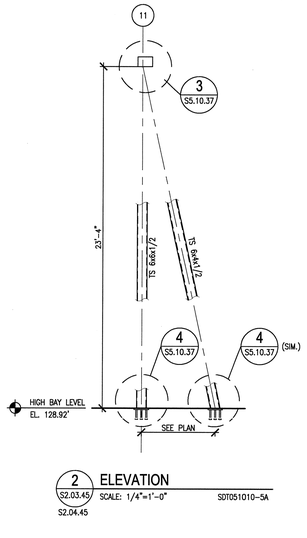

2 S2.03.45 ELEVATION
SCALE: 1/4"=1'-0" SDT051010-5A
S2.04.45

NOTE:
LEAVE POCKET IN WALL MIN. 2" LARGER THAN BASE PLATE. FILL WITH CONCRETE AFTER BEAM IS SET TO WITHIN 2" OF TOP. DRYPACK LAST 2".

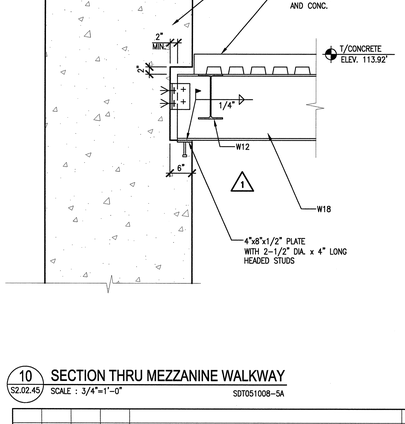

10 S2.02.45 SECTION THRU MEZZANINE WALKWAY
SCALE : 3/4"=1'-0" SDT051008-5A

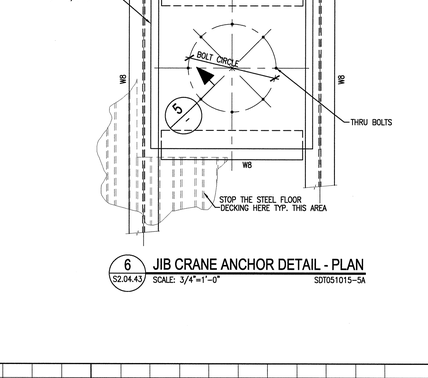

6 S2.04.43 JIB CRANE ANCHOR DETAIL - PLAN
SCALE: 3/4"=1'-0" SDT051015-5A

1' 6" 0 1' 2'
SCALE: 3/4" = 1'-0"
4' 2' 0 4' 8'
SCALE: 1/4" = 1'-0"

NO REPRESENTATION OR WARRANTY, EXPRESSED OR IMPLIED, IS MADE AS TO THE ACCURACY, COMPLETENESS OR USEFULNESS OF THE INFORMATION OR STATEMENTS CONTAINED IN THESE DRAWINGS, OR THAT THE USE OR DISCLOSURE OF ANY INFORMATION, APPARATUS, METHOD, OR PROCESS DISCLOSED IN THESE DRAWINGS MAY NOT INFRINGE PRIVATE RIGHTS OF OTHERS. NO LIABILITY IS ASSUMED WITH RESPECT TO THE USE OF, OR FOR DAMAGES RESULTING FROM THE USE OF ANY INFORMATION, APPARATUS, METHOD, OR PROCESS DISCLOSED IN THESE DRAWINGS. DRAWINGS MADE AVAILABLE FOR INFORMATION TO BIDDER ARE NOT TO BE USED FOR OTHER PURPOSES AND ARE TO BE RETURNED UPON REQUEST OF THE FORWARDING CONTRACTOR.

NUMBER OF SECTION OR DETAIL
DRAWING ON WHICH SECTION OR DETAIL IS SHOWN OR TAKEN
SECTION AND DETAIL KEY

THIS DOCUMENT CONTROLLED BY
CHANGE CONTROL SYSTEM 3
ENGINEERING PROCEDURE SNS-ENG-G001

REV	CHANGE TYPE	CHANGE CONTROL SYSTEM	CHANGE REQUEST NUMBER	DESCRIPTION	DSN	CHK	DEPT
2	A	3	22	DCN T5-022 – 4/3/02	GPR	REW	
1	A	3	18	DCN T5-018 – 03/01/02	GPR	REW	
0				CERTIFIED FOR CONSTRUCTION – 10/26/01	GPR	REW	

REVISION OR ISSUE PURPOSE

DATE	PE	DATE	PJ	DATE	REQ	DATE	UTB	DATE	RPE	RPE NO	DATE
	CLG	3/2	RAD	3/7			JRL	3/2	JJB	23236	4/3/02
	CLG	11/15	RAD	11/13			JRL	11/13	JJB	23236	10/26/01

REVISION APPROVALS

ST	CV	EC	EE	EM	IE	M	PD	SE	AR
–	–	–	–	–	–	–	–	–	–
–	–	–	–	–	–	–	–	–	–
–	WRS	AK	WRS	BWJ	–	MP	–	ED	

SQUAD CHECK

RPE
JOHN BUSCH
REGISTERED ENGINEER
AGRICULTURE
NO. 22236
STATE OF TENNESSEE
REV. 2 DATE 4/3/02

DSN	G. REDDY	10/26/01
DRW	T. DEADY	10/26/01
CHK	R.WALKINGTON	10/26/01
DEPT		
PE	C. GARREN	11/15/01
PJ	R. DEAN	11/13/01
REQ		
UTB	J. LAWSON	11/13/01

DRAWING APPROVALS

108030700-S8E-8700-A098

Knight Jacobs
Knight/Jacobs Joint Venture
701 Scarboro Road, MS 8253
Oak Ridge, TN 37830
865-241-9433
fax 865-241-3400

KNIGHT
Knight Advanced Technology
549 West Randolph St.
Chicago, IL 60661

UT-BATTELLE
Oak Ridge National Laboratory
managed for the DEPARTMENT OF ENERGY under
U.S. GOVERNMENT contract DE-AC05-00OR22725
UT-BATTELLE, LLC, • Oak Ridge, Tennessee

PROJECT NAME:
SPALLATION NEUTRON SOURCE
TARGET BUILDING
SECTIONS AND DETAILS

1	48	49	50	PLANT	BLDG	FL	SH.	OF	TYPE	CLASS
3	S	X	X	8	8700		1	1	S	U
51		52		53	WBS					REV
NC		NA			1.8.3.7		S5.10.37			2

Date: 04/03/2002
Username: NARKIEWICZ
FILE:J:\PROJECTS\8000\700_OADS\OADS_S4\140_PJ\STLD5-10-10-27.DWG

AutoCAD