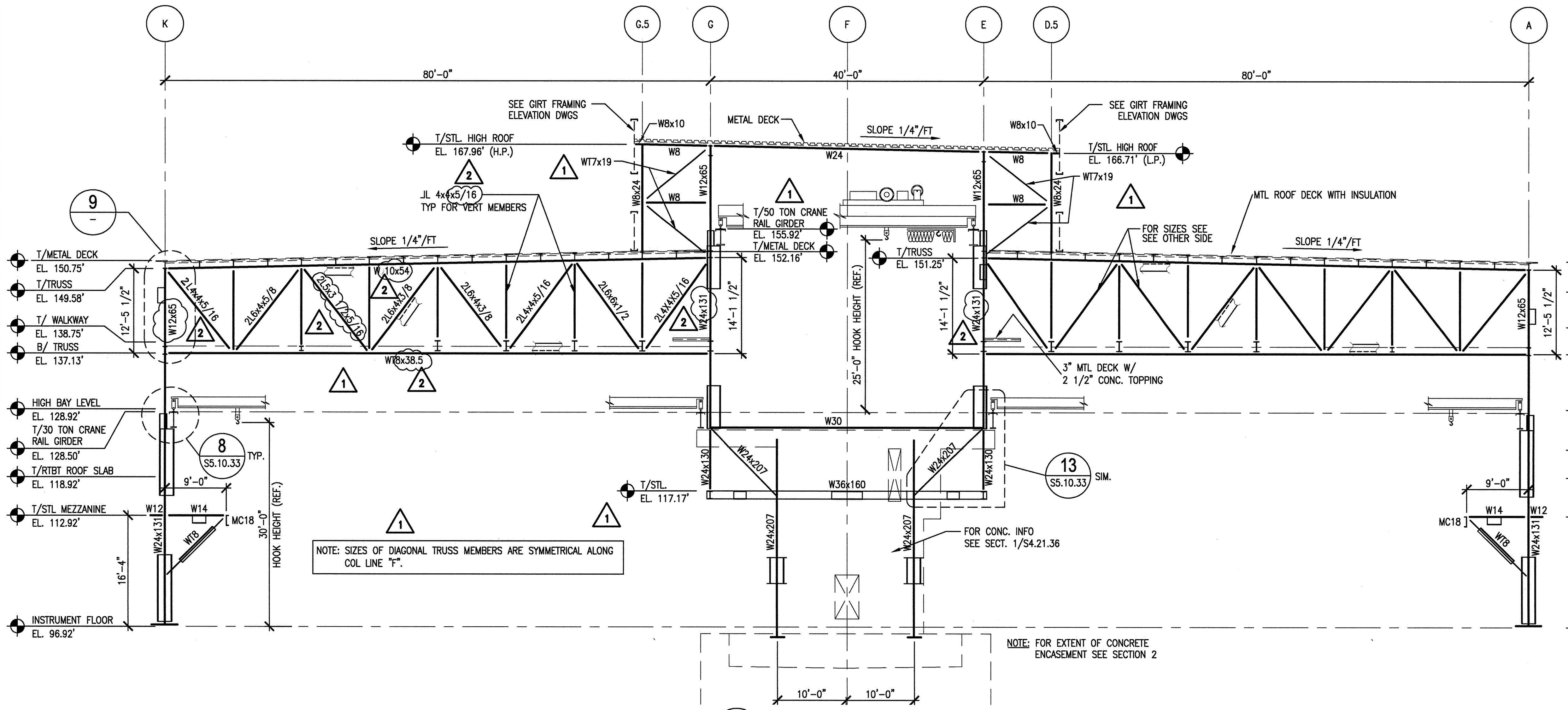

1 ELEVATION COLUMN LINE "6" (S5.10.34) SCALE: 3./32"=1'-0" SEL000-5A

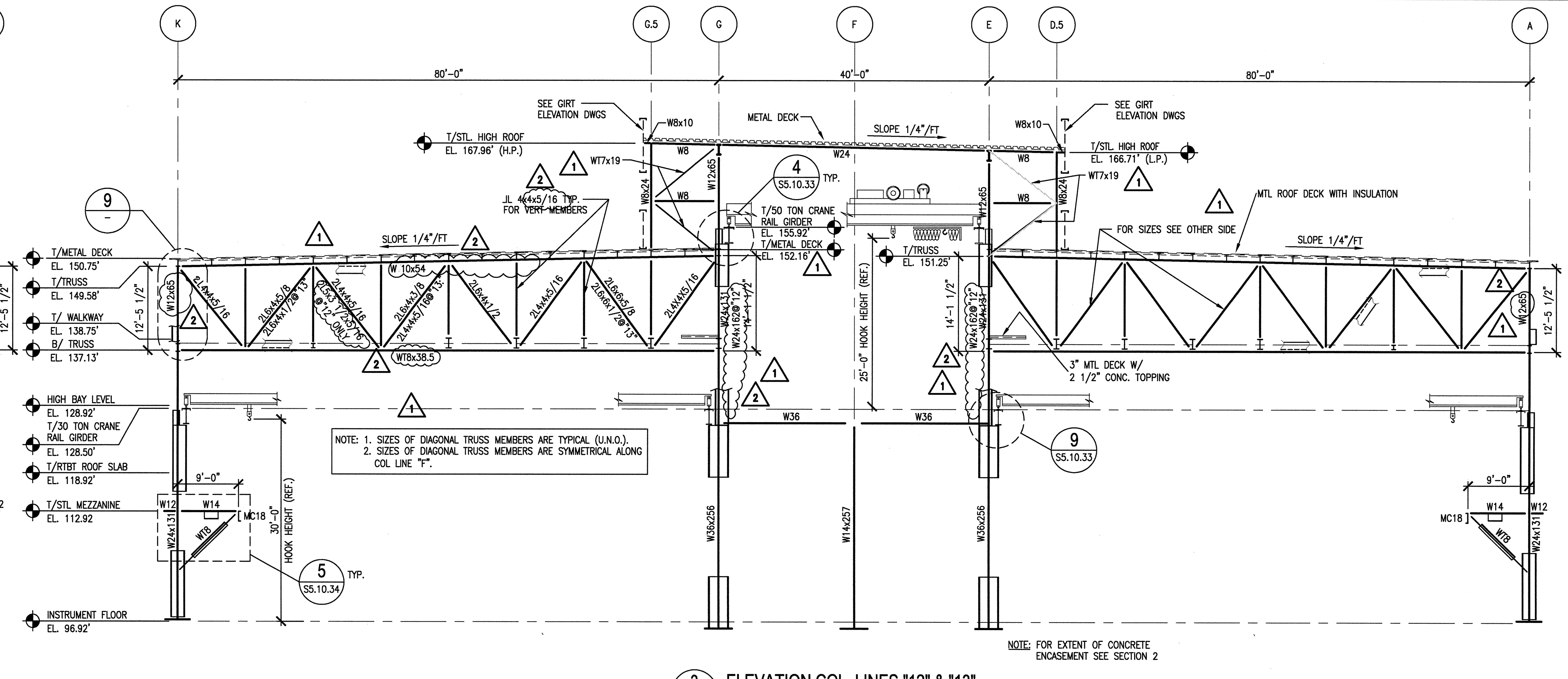

3 ELEVATION COL. LINES "12" & "13" (S5.10.34) SCALE: 3/32"=1'-0" SEL000-5A

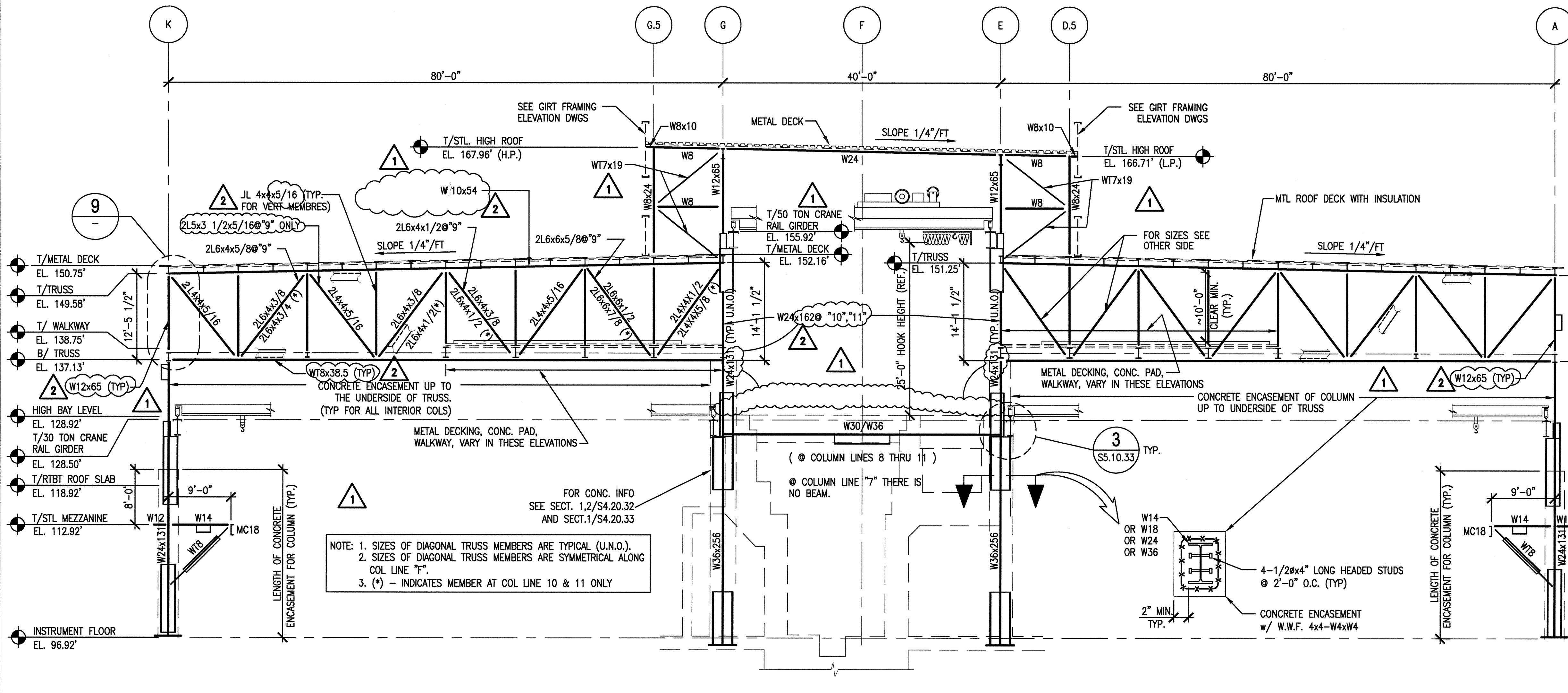

2 ELEVATION COLUMN LINE "7" THRU "11" (S5.10.34) SCALE: 3./32"=1'-0" SEL000-5A

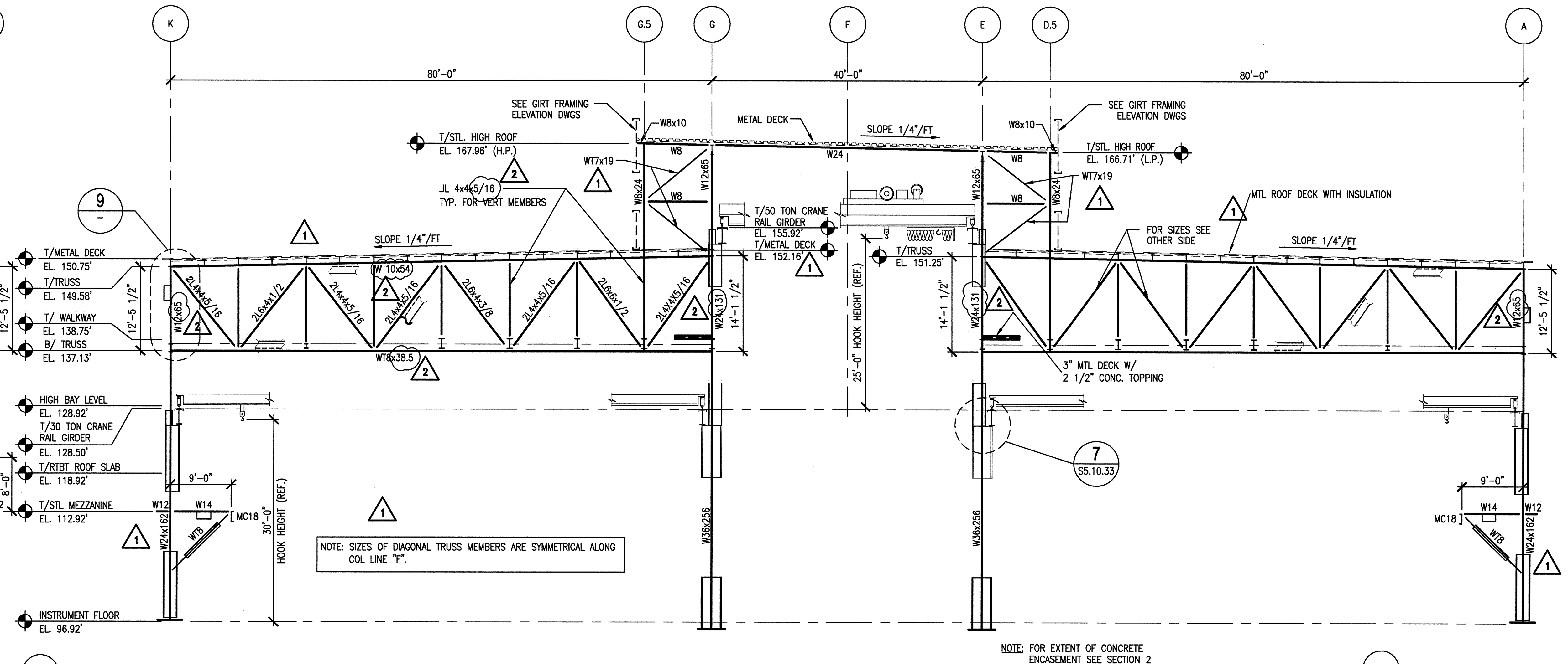

4 ELEVATION COL. LINES "14" (S5.10.34) SCALE: 3/32"=1'-0" SEL000-5A

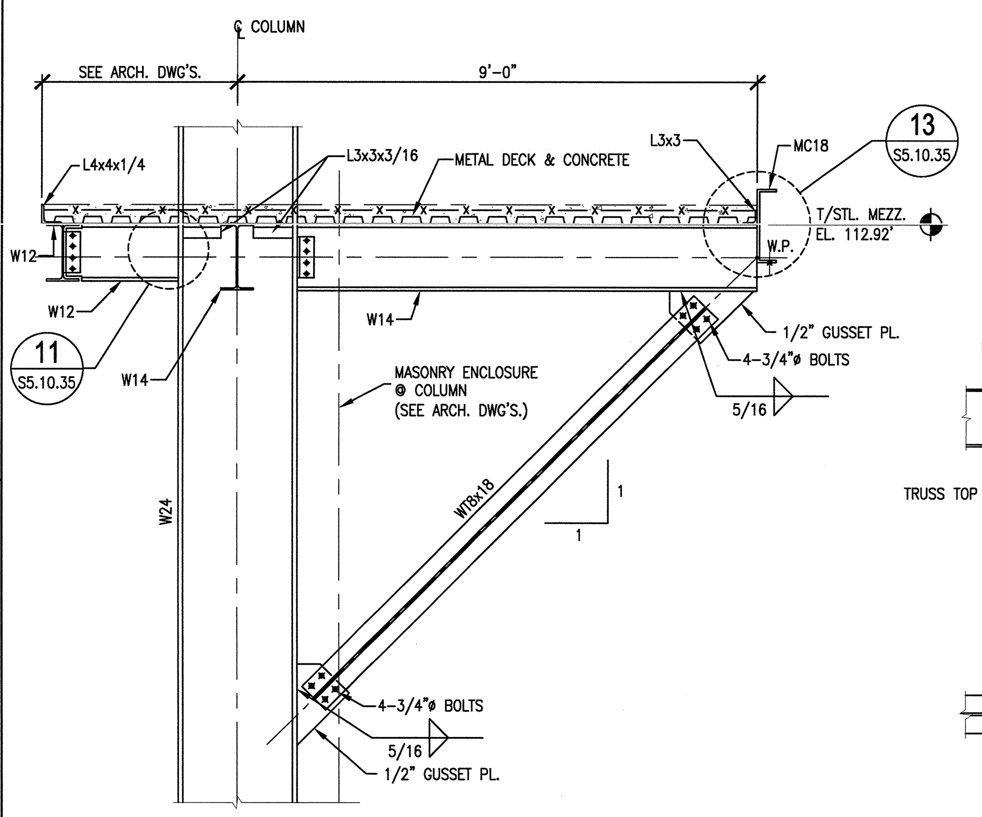

5 SECTION @ KNEE BRACING (S5.10.34) SCALE : 1/2" = 1'-0" SDT051012-5A (TYPICAL @ EXTERIOR COLUMNS U.N.O.)

S5.10.33
S2.02.41
S2.02.43
S2.02.44

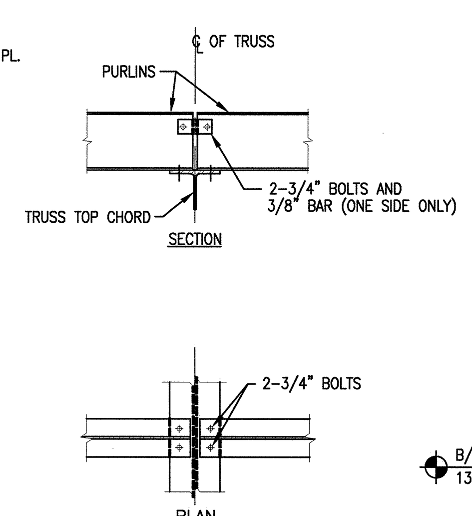

6 TYPICAL PURLIN TO TRUSS CONNECTION DETAIL (S5.10.32) SCALE : 1/2"=1'-0" SDT051012-5A

S2.09.41 S5.10.34
S2.09.44
S2.09.46
S2.09.47
S2.09.49

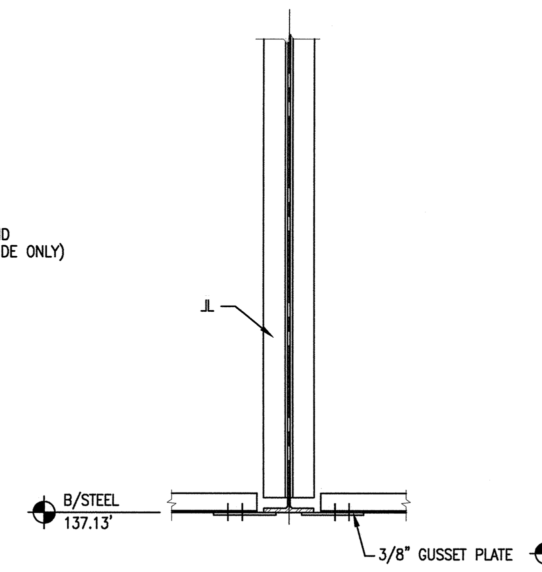

7 TYPICAL BOTTOM CHORD BRACING CONNECTION DETAIL (S5.10.32) SCALE : 1/2"=1'-0" SDT051012-5A

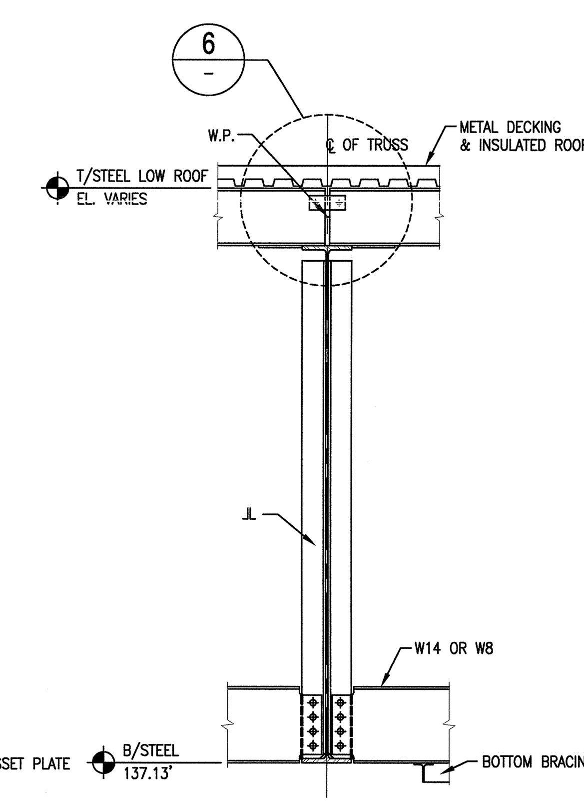

8 TYPICAL BEAM TO CHORD CONNECTION DETAIL (S2.04.41) SCALE : 1/2"=1'-0" SDT051012-5A

S2.04.43 S2.09.41 S2.09.46
S2.04.44 S2.09.43
S2.04.46 S2.09.44
S2.04.49 S2.09.49

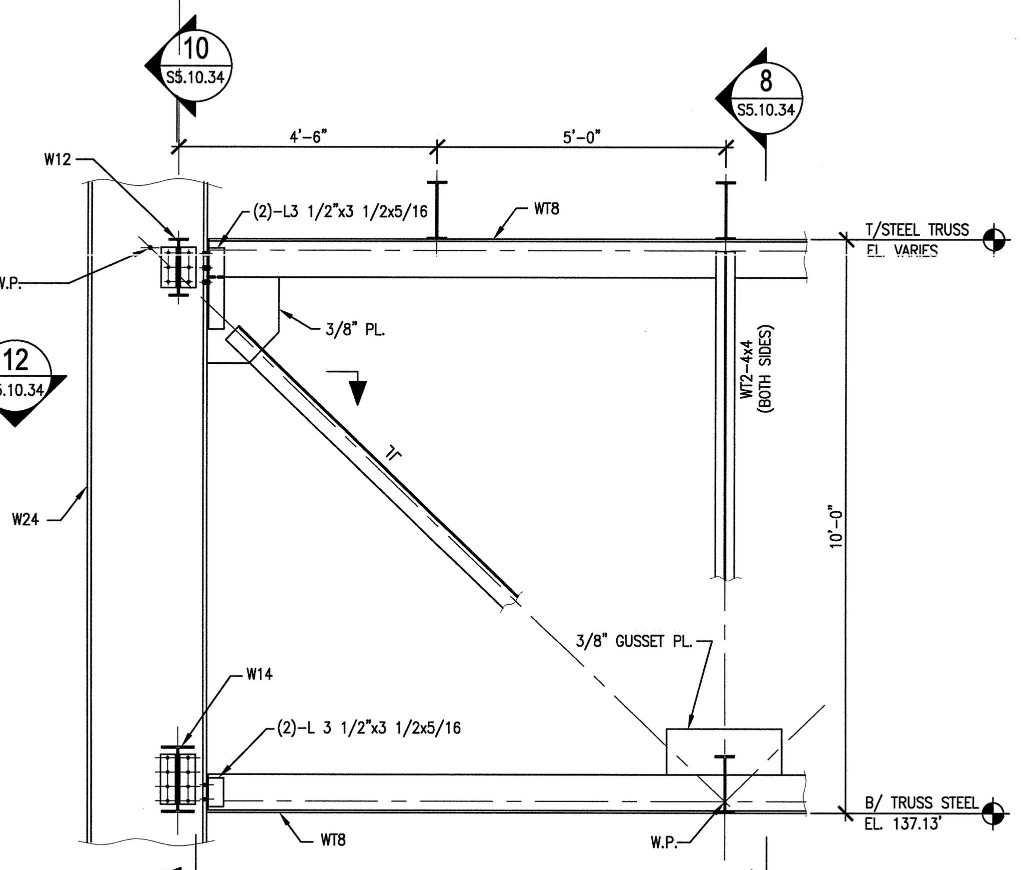

9 SECTION (S5.10.34) SCALE : 1/2"=1'-0" SDT051012-5A

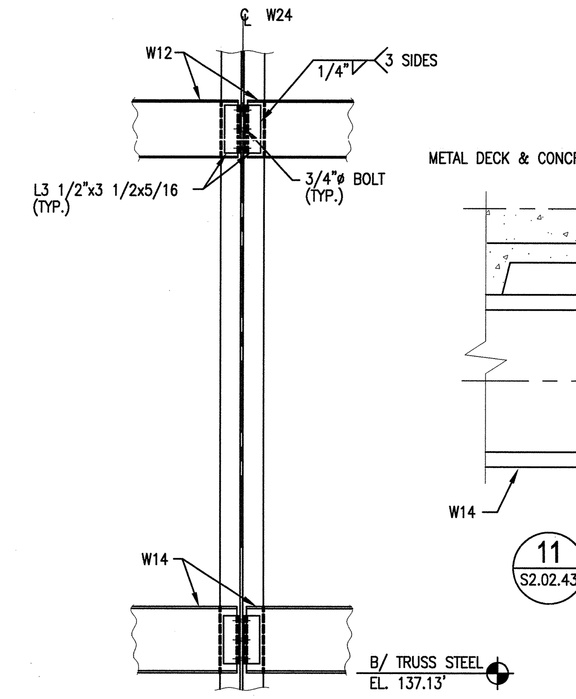

10 SECTION (S5.10.34) SCALE : 1/2"=1'-0" SDT051012-5A

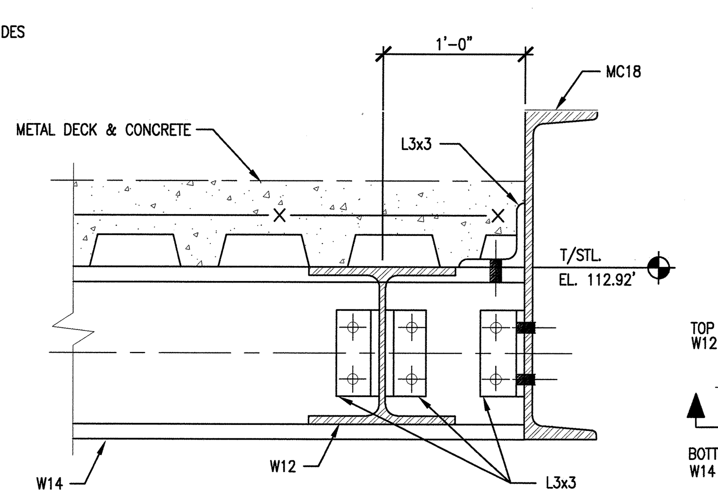

11 SECTION THRU MEZZANINE (S2.02.43) SCALE : NONE SDT051008-5A

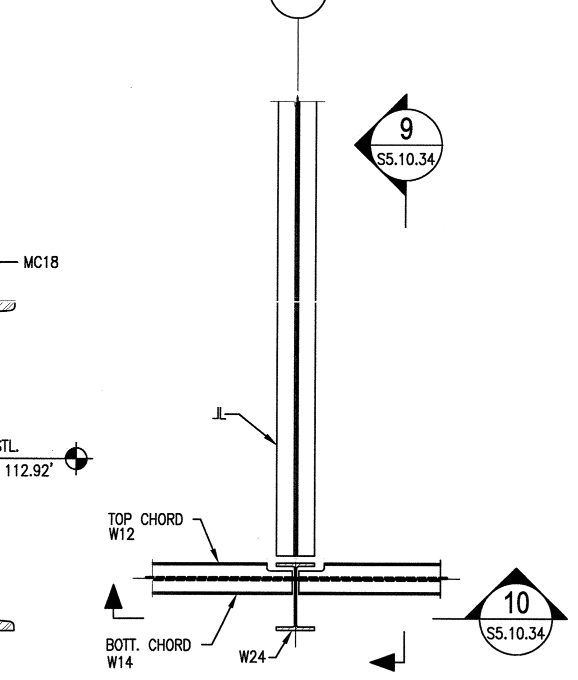

12 DETAIL SCALE : 1/2":1'-0" SDT051012-5A

SCALE: 1/2" = 1'-0"

SCALE: 3/32" = 1'-0"

NO REPRESENTATION OR WARRANTY, EXPRESSED OR IMPLIED, IS MADE AS TO THE ACCURACY, COMPLETENESS OR USEFULNESS OF THE INFORMATION OR STATEMENTS CONTAINED IN THESE DRAWINGS, OR THAT THE USE OR DISCLOSURE OF ANY INFORMATION, APPARATUS, METHOD, OR PROCESS DISCLOSED IN THESE DRAWINGS MAY NOT INFRINGE PRIVATE RIGHTS OF OTHERS. NO LIABILITY IS ASSUMED WITH RESPECT TO THE USE OF, OR FOR DAMAGES RESULTING FROM THE USE OF ANY INFORMATION, APPARATUS, METHOD, OR PROCESS DISCLOSED IN THESE DRAWINGS. DRAWINGS MADE AVAILABLE FOR INFORMATION TO BIDDER ARE NOT TO BE USED FOR OTHER PURPOSES AND ARE TO BE RETURNED UPON REQUEST OF THE FORWARDING CONTRACTOR.

SECTION AND DETAIL KEY: NUMBER OF SECTION OR DETAIL / DRAWING ON WHICH SECTION OR DETAIL IS SHOWN OR TAKEN

THIS DOCUMENT CONTROLLED BY
CHANGE CONTROL SYSTEM 3
ENGINEERING PROCEDURE SNS-ENG-G001

REV	CHANGE TYPE	CHANGE CONTROL SYSTEM	CHANGE REQUEST NUMBER	DESCRIPTION	DSN	CHK	DEPT	DATE	PE	DATE	PJ	DATE	REQ	DATE	UTB	DATE	RPE	RPE NO	DATE
2	A	3	22	DCN T5-022 - 4/3/02	GPR	REW			CLG	4/02	RAD	4/4/02			JRL	4/4/02	JJB	23236	4/3/02
1	A	3	18	DCN T5-018 - 03/01/02	GPR	REW			CLG	3/2	RAD	3/7			JRL	3/2	JJB	23236	3/1/02
0				CERTIFIED FOR CONSTRUCTION - 10/26/01	GPR	REW			CLG	11/15	RAD	11/14			JRL	11/14	JJB	23236	11/13/01

REVISION OR ISSUE PURPOSE — REVISION APPROVALS

ST	CV	EC	EE	EM	IE	M	PD	SE	AR
GPR	–	–	–	–	–	–	–	–	–
GPR	–	–	–	–	–	–	–	–	–
REW	–	WRS	AK	WRS	BWJ	–	MP	–	ED

SQUAD CHECK

RPE: JOHN BUSCH, REGISTERED ENGINEER, AGRICULTURE, COMMERCE, NO. 23236, STATE OF TENNESSEE

REV. 2 DATE 4/03/02

DSN	G. REDDY	10/26/01
DRW	G.MARSZALEK	10/26/01
CHK	R.WALKINGTON	10/26/01
DEPT		
PE	C. GARREN	11/15/01
PJ	R. DEAN	11/14/01
REQ		
UTB	J. LAWSON	11/14/01

DRAWING APPROVALS

108030700-S8E-8700-A085

Knight/Jacobs Joint Venture
701 Scarboro Road, MS 8253
Oak Ridge, TN 37830
865-241-9433
fax 865-241-3400

KNIGHT
Knight Advanced Technology
549 West Randolph St. Chicago, IL 60661

UT-BATTELLE
Oak Ridge National Laboratory
managed for the DEPARTMENT OF ENERGY under U.S. GOVERNMENT contract DE-AC05-00OR22725
UT-BATTELLE, LLC, Oak Ridge, Tennessee

PROJECT NAME:
SPALLATION NEUTRON SOURCE

TARGET BUILDING COLUMN LINE "6" THRU "14" STEEL ELEVATIONS

1	48	49	50	PLANT	BLDG	FL	SH.	OF	TYPE	CLASS
3	S	X	X	8	8700		1	1	S	U
51 NC	52 NA		53		WBS 1.8.3.7		S5.10.34			REV 2