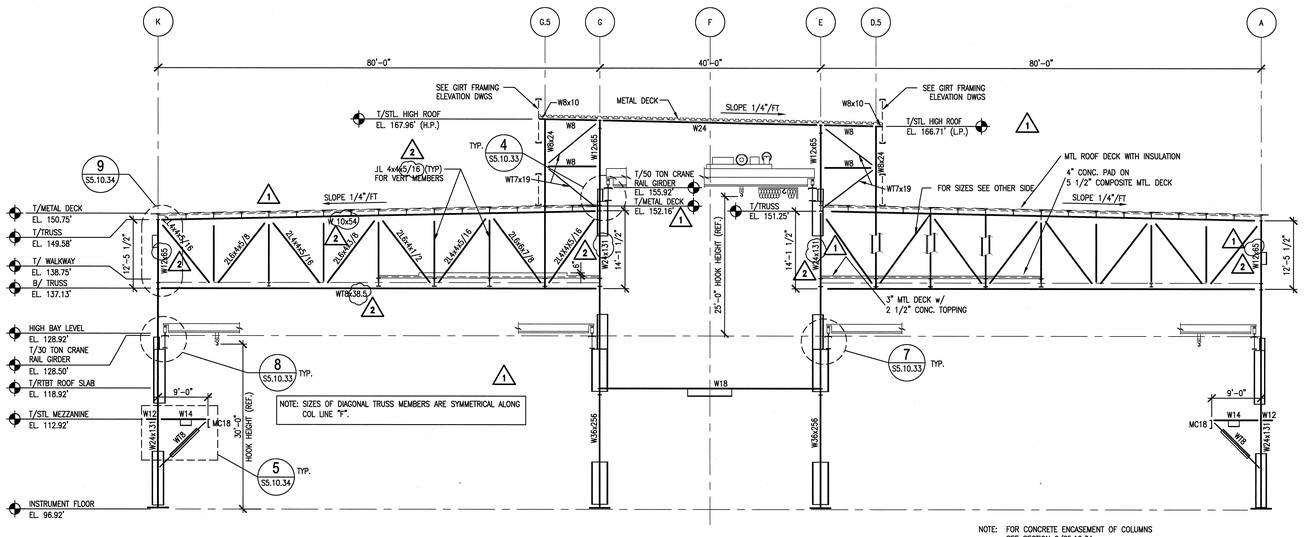

1 S5.10.33 ELEVATION COL. LINE 2.5
SCALE: 3/32"=1'-0"

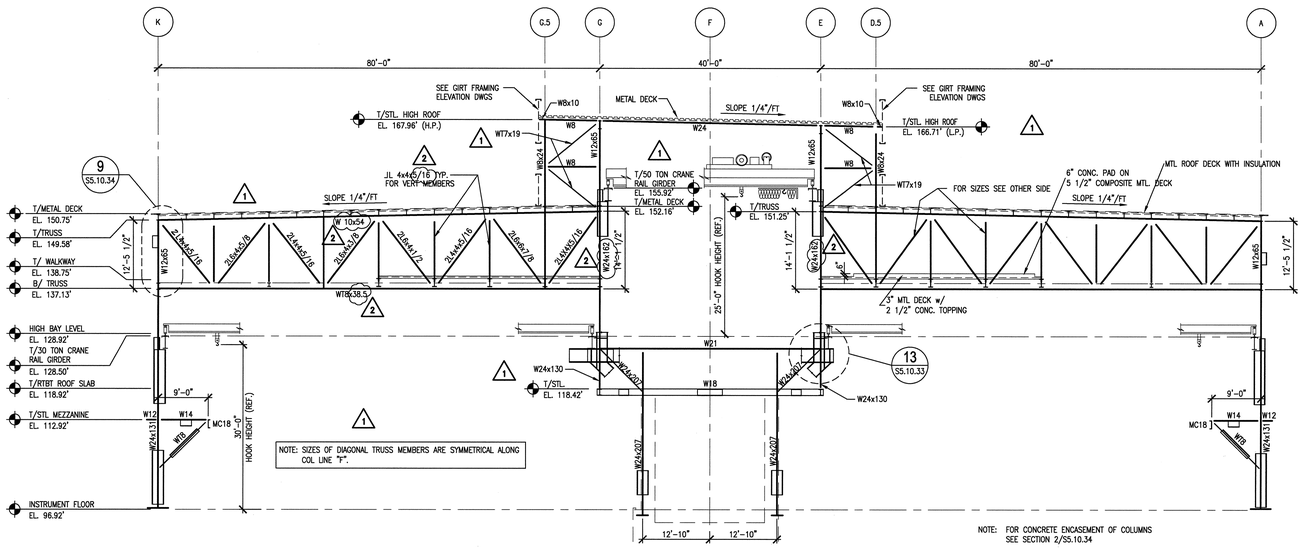

2 S5.10.33 ELEVATION COL. LINE "4"
SCALE: 3/32"=1'-0"

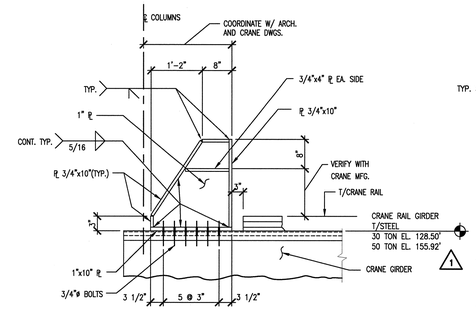

6 S5.10.33 CRANE STOP DETAIL
SCALE: 3/4"=1'-0" SDT051008-5A
S1.05.30

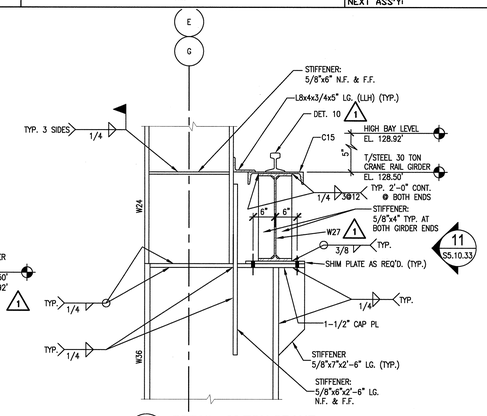

7 S5.10.33 DETAIL - 30 TON CRANE
SCALE: 3/4"=1'-0" SDT051008-5A
S5.10.34
S1.05.30

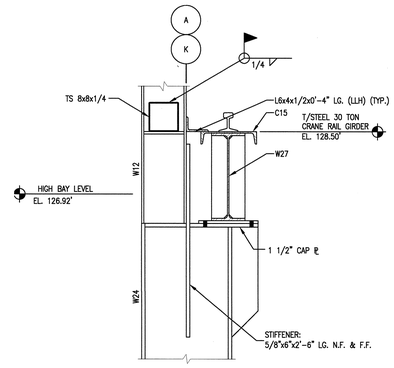

8 S5.10.33 DETAIL - 30 TON CRANE
SCALE: 3/4"=1'-0" SDT051008-5A
S5.10.34
S1.05.30
SEE SECTION 7 FOR ADD'L. INFORMATION

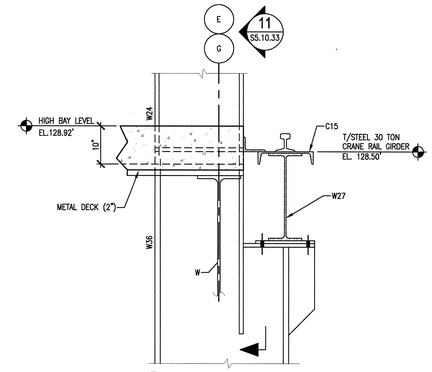

9 S5.10.33 DETAIL - 30 TON CRANE
SCALE: 3/4"=1'-0" SDT051008-5A
S5.10.34
S1.05.30

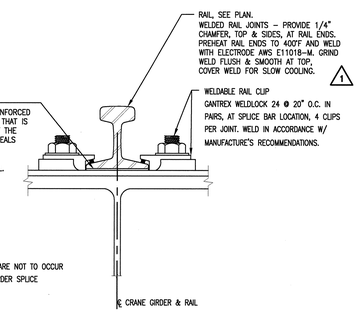

NOTE:
RAIL JOINTS ARE NOT TO OCCUR @ CRANE GIRDER SPLICE LOCATIONS.

10 S5.10.33 TYPICAL CRANE RAIL CONNECTION DETAIL
SCALE: NO SCALE SDT051008-5A

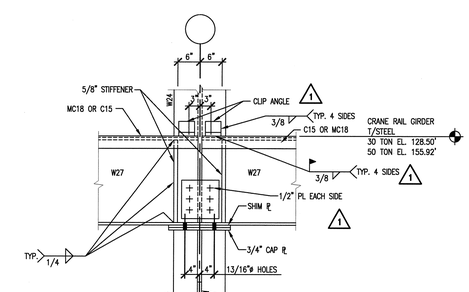

11 S5.10.33 DETAIL FOR CRANE SUPPORT
SCALE: 3/4" = 1'-0" SDT051008-5A
S5.10.31

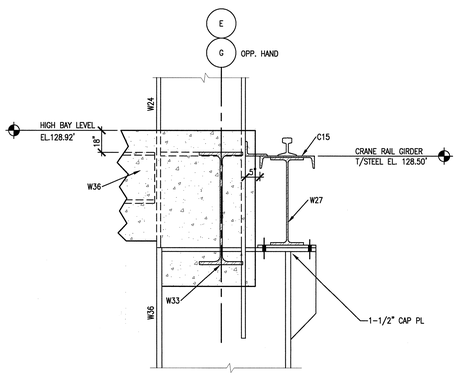

3 S5.10.33 DETAIL @ 30 TON CRANE
SCALE: 3/4"=1'-0" SDT051008-5A
S5.10.34
S1.05.30

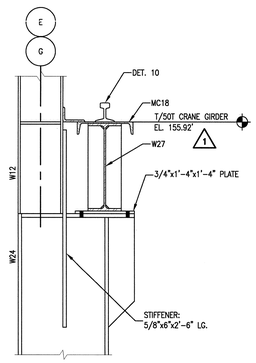

4 S5.10.33 DETAIL - 50 TON CRANE
SCALE: 3/4"=1'-0" SDT051008-5A
S5.10.34
S1.05.30
SEE SECTION 7 FOR ADD'L. INFORMATION

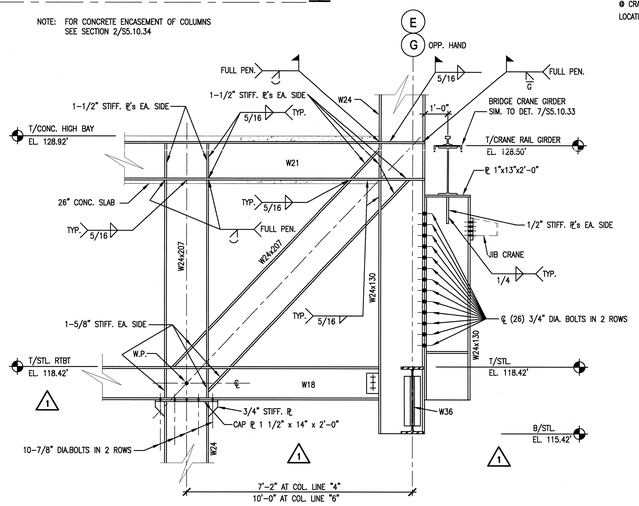

13 S5.10.33 DETAIL - 30 TON CRANE
SCALE: 3/8"=1'-0" SDT051039-5A
S5.10.34

SCALE: 3/4" = 1'-0"

SCALE: 3/32" = 1'-0"

NO REPRESENTATION OR WARRANTY, EXPRESSED OR IMPLIED, IS MADE AS TO THE ACCURACY, COMPLETENESS OR USEFULNESS OF THE INFORMATION OR STATEMENTS CONTAINED IN THESE DRAWINGS, OR THAT THE USE OR DISCLOSURE OF ANY INFORMATION, APPARATUS, METHOD, OR PROCESS DISCLOSED IN THESE DRAWINGS MAY NOT INFRINGE PRIVATE RIGHTS OF OTHERS. NO LIABILITY IS ASSUMED WITH RESPECT TO THE USE OF, OR FOR DAMAGES RESULTING FROM THE USE OF ANY INFORMATION, APPARATUS, METHOD, OR PROCESS DISCLOSED IN THESE DRAWINGS. DRAWINGS MADE AVAILABLE FOR INFORMATION TO BIDDER ARE NOT TO BE USED FOR OTHER PURPOSES AND ARE TO BE RETURNED UPON REQUEST OF THE FORWARDING CONTRACTOR.

NUMBER OF SECTION OR DETAIL — DRAWING ON WHICH SECTION OR DETAIL IS SHOWN OR TAKEN

SECTION AND DETAIL KEY

THIS DOCUMENT CONTROLLED BY
CHANGE CONTROL SYSTEM 3
ENGINEERING PROCEDURE SNS-ENG-G001

REV	CHANGE TYPE	CHANGE CONTROL SYSTEM	CHANGE REQUEST NUMBER	DESCRIPTION	DSN	CHK	DEPT	DATE	PE	DATE	PJ	DATE	REQ	DATE	UTB	DATE	RPE	RPE NO	DATE
2	A	3	22	DCN T5-022 – 4/3/02	GPR	REW		4/1/02		RAD	4/1/02				JJB	4/3/02	JJB	23236	4/3/02
1	A	3	18	DCN T5-018 – 03/01/02	GPR	REW			CLG	3/2	RAD	3/7			JJB	3/2	JJB	23236	3/1/02
0				CERTIFIED FOR CONSTRUCTION – 10/26/01	GPR	REW			CLG	11/15	RAD	11/14			JJB	11/14	JJB	23236	11/13/01

REVISION OR ISSUE PURPOSE — REVISION APPROVALS

	DSN	CHK	DEPT	DATE	PE	DATE	PJ	DATE	REQ	DATE	UTB	DATE	RPE	RPE NO	DATE
GPR	–	–	–	–	–	–	–	–	–	–	–	–	–	–	–
GPR	–	–	–	–	–	–	–	–	–	–	–	–	–	–	–
REW	–	WRS	AK	WRS	BWJ	–	MP	–	ED						

ST	CV	EC	EE	EM	IE	M	PD	SE	AR

SQUAD CHECK

RPE		
DSN	G. REDDY	10/26/01
DRW	G.MARSZALEK	10/26/01
CHK	R.WALKINGTON	10/26/01
DEPT		
PE	C. GARREN	11/15/01
PJ	R. DEAN	11/14/01
REQ		
UTB	J. LAWSON	11/14/01

REV. 2 DATE 4/03/02

DRAWING APPROVALS

108030700-S8E-8700-A084

Knight Jacobs
Knight/Jacobs Joint Venture
701 Scarboro Road, MS 8253
Oak Ridge, TN 37830
865-241-9433
fax 865-241-3400

KNIGHT
Knight Advanced Technology
549 West Randolph St.
Chicago, IL 60661

UT-BATTELLE
Oak Ridge National Laboratory
managed for the DEPARTMENT OF ENERGY under
U.S. GOVERNMENT contract DE-AC05-00OR22725
UT-BATTELLE, LLC. • Oak Ridge, Tennessee

PROJECT NAME:
SPALLATION NEUTRON SOURCE
TARGET BUILDING
COLUMN LINES "2", "5" AND "4"
STEEL ELEVATIONS AND DETAILS

1	4B	49	50	PLANT	BLDG	FL	SH.	OF	TYPE	CLASS
3	S	X	X	8	8700		1	1	S	U
51		52		53	WBS		S5.10.33			REV
NC		NA			1.8.3.7					2

AutoCAD

Date: 04/03/2002 Time: 14:39:47
Drawing: C:\DOCUMENTS AND SETTINGS\GARREN\DGN\S_JACOBS\MAIN\S8E_MAIN\S8E_PLOT\S5-10-33.DWG