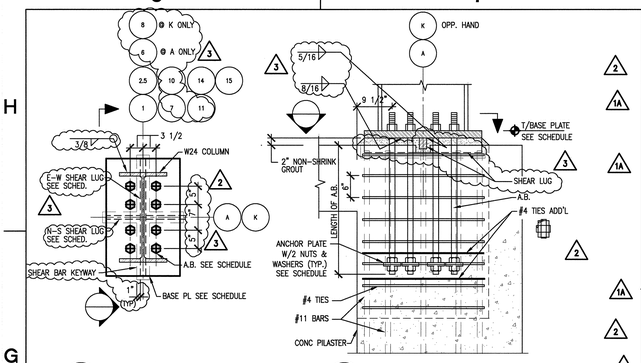

DETAIL PLAN SCALE: NONE

DETAIL ELEVATION SCALE: NONE

21 / S5.20.30 BASE PLATE DETAIL FOR A-1, A-2.5, K-1, K-2.5 A-14, A-15, K-14, K-15, E.1-16, F.9-16

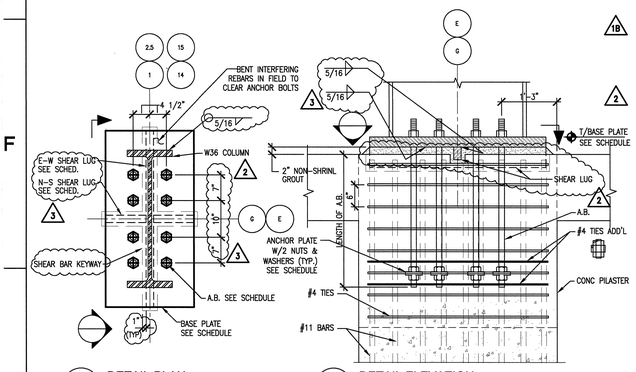

DETAIL PLAN SCALE: NONE

DETAIL ELEVATION SCALE: NONE

22 / S5.20.30 BASE PLATE DETAIL FOR E-1, E-2.5, G-1, G-2.5 E-14, E-15, G-14, G-15

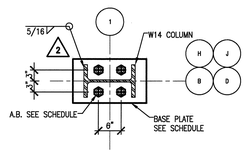

23 / S5.20.30 BASE PLATE DETAIL FOR B-1, D-1, H-1, J-1 SCALE: NONE

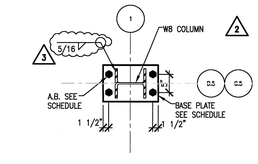

24 / S5.20.30 BASE PLATE DETAIL FOR D.5-1 & G.5-1 SCALE: NONE

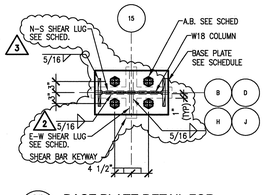

26 / S5.20.30 BASE PLATE DETAIL FOR B-15, D-15, H-15, J-15 SCALE: NONE

COLUMN LINES	BASE PLATE DIMENSIONS	ANCHOR BOLTS (A-325)	T/BASE PLATE ELEVATION	SHEAR BAR (t x H x L) E-W SHEAR	N-S SHEAR	REMARK
A4, A5, A8, A9, A12, A13	3'-0" x 1'-8" x 2"	6 - 1 1/2" DIA. x 2'-6" LG.	97'-3"	–	1"x3"x20"	SEE DET.15
C15	2'-2" x 1'-0" x 1 1/4"	4 - 1 1/2" DIA. x 2'-6" LG.	97'-2 1/4"	–	–	
E.5-4, E.6-6, F.6-4, F.5-6,	3'-2" x 1'-8" x 2"	6 - 1 1/2" DIA. x 2'-6" LG.	97'-3"	–	–	
F12, F13	2'-4 1/4" x 2'-2" x 3"	4 - 1" DIA. x 2'-3" LG.	97'-4"	–	–	
I15	2'-2" x 1'-0" x 1"	4 - 1" DIA. x 2'-3" LG.	97'-2"	–	–	
E1, E2.5	4'-0" x 2'-0" x 2 3/4"	8 - 1 3/4" DIA. x 3'-0" LG	97'-3 3/4"	–	–	SEE DET.22
E7, E8, E9, E10, E11, E12, E13	4'-2" x 2'-0" x 3"	6 - 2" DIA. x 3'-3" LG.	97'-4"	–	1"x3"X24	SEE DETAIL 16 SHEAR BAR FOR E13 ONLY
E14, E15	4'-0" x 2'-0" x 3"	6 - 2" DIA. x 3'-3" LG.	97'-4"	1"x3"x48"	1"x3"X24"	SEE DET. 22
G1, G2.5	4'-0" x 2'-0" x 2 3/4"	6 - 1 3/4" DIA. x 3'-0" LG.	97'-3 3/4"	–	–	SEE DETAIL 22
G7, G8, G9, G10, G11, G12, G13	4'-2" x 2'-0" x 3"	6 - 2" DIA. x 3'-3"	97'-4"	–	1"x3"X24	SEE DETAIL 16 SHEAR BAR FOR G13 ONLY
G14, G15	4'-0" x 2'-0" x 3"	8 - 2" DIA. x 3'-3"	97'-4"	1"x3"x48"	1"x3"X24"	SEE DET. 22
K4, K5, K6, K9, K12, K13	3'-0" x 1'-8" x 2"	6 - 1 1/2" DIA. x 2'-6"	97'-3"	–	1"x3"x20"	SEE DET.15
C1	1'-10" x 1'-0" x 1 1/4"	4 - 1 1/2" DIA. x 2'-6" LG.	113'-6 1/4"	–	–	
D1, H1	1'-8" x 1'-0" x 2"	4 - 1 1/2" DIA. x 2'-6" LG.	113'-7"	–	–	SEE DETAIL 23
I1	1'-2" x 1'-10" x 1 1/2"	4 - 1" DIA. x 2'-3" LG.	113'-6 1/2"	–	–	
K1, A1, A2.5, A14, A15, K-2.5, K14, K15 A6, A7, A10, A11, K7, K8, K10, K11	2'-8" x 1'-8" x 2 1/2"	8 - 1 1/2" DIA. x 2'-6" LG.	97'-3 1/2"	1 1/2"x4"x32"	1"x3"x20"	SEE DETAIL 21
B1	1'-8" x 1'-0" x 1 1/4"	4 - 1 1/2" DIA. x 2'-6" LG.	97'-2 1/4"	–	–	SEE DETAIL 23
D.5-0.6, G.5-0.6	1'-10" x 1'-0" x 1 1/2"	4 - 1" DIA. x 2'-3" LG.	134'-2 1/2"	–	–	
B-11.6, B-12, B-13, B-14, C.7-2 D.3-2, J.1-2, J-11.6, J-12, J-13 J-14, J.5-2	1'-4" x 1'-0" x 3/4"	4 - 1" DIA. x 2'-3" LG.	97'-1 3/4"	–	–	
CHOPPER COLUMNS 20 NOS	1'-2" x 3'-2" x 3 1/2"	4 - 1 1/2" DIA.	97'-4 1/2"	–	–	
E-0.6, G-0.6	3'-0" x 1'-8' x 1"	6 - 1 1/2" DIA. x 2'-6" LG.	134'-2"	–	–	
F15, F16	1'-2" x 1'-10" x 1 1/2"	4 - 1" DIA. x 2'-3" LG.	97'-2 1/2"	–	2 3/4"x7"x14"	SHEAR LUG FOR F16 ONLY SEE DET. 15 (AS NOTED)
D.5-16, G.5-15.5	1'-2" x 1'-10" x 1 1/2"	4 - 1" DIA. x 2'-3" LG.	97'-2 1/2"	–	–	
F.06	1'-10" x 1'-2" x 1 1/2"	4 - 1" DIA. x 2'-3" LG.	134'-2 1/2"	–	–	
G.5-16	1'-6" x 1'-6" x 1"	4 - 1" DIA. x 1'-8" LG.	97'-2"	–	–	
D.5-1, G.5-1	1'-4" x 1'-0" x 1/4"	4 - 1" DIA. x 1'-8" LG.	119'-2 1/4"	–	–	SEE DET.24
D.5-15, G.5-15	1'-10"x1'-2"x1 1/2"	4 - 1" DIA. x 2'-3" LG.	97'-2 1/2"	–	1"x3"x14"	SEE DETAIL 25
E.1-16, F.9-16	2'-8" x 1'-8" x 2 3/4"	8 - 1 1/2" DIA. x 2'-6" LG.	97'-3 3/4"	–	1 1/2"x4"x20"	SEE DETAIL 21
B15	1'-8" x 1'-0" x 2 1/2"	4 - 1 1/2" DIA. x 2'-6" LG.	97'-3 1/2"	1"x3"x20"	–	SEE DETAIL 26
D15	1'-8" x 1'-0" x 2 1/2"	4 - 1 1/2" DIA. x 2'-6" LG.	97'-3 1/2"	–	1"x3"x12"	SEE DETAIL 26
H15	2'-0" x 1'-0" x 2 1/2"	4 - 1 1/2" DIA. x 2'-6" LG.	97'-3 1/2"	–	1"x3"x12"	SEE DETAIL 26
J15	2'-0" x 1'-0" x 2 1/2"	4 - 1 1/2" DIA. x 2'-6" LG.	97'-3 1/2"	1"x3"x24"	–	SEE DETAIL 26
J1	1'-2" x 1'-10" x 2"	4 - 1" DIA. x 2'-3" LG.	97'-3"	–	–	SEE DETAIL 23

SDT051008-5A

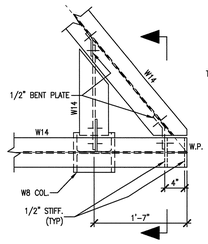

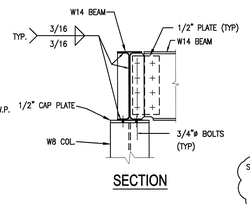

SECTION

19 / S2.09.50 PARTIAL PLAN AT SKEWED CONNECTION SCALE: 1"=1'-0" SDT051016-5A

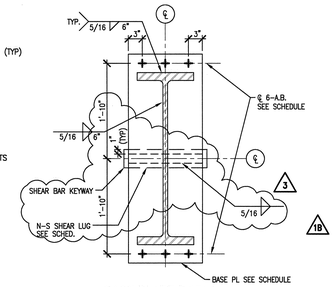

16 / – BASE PLATE DETAIL FOR W36 COLUMN SCALE : NONE SDT051014-5A

NOTE: 1. BOTTOM/BASE PLATE EL.+97'-1"

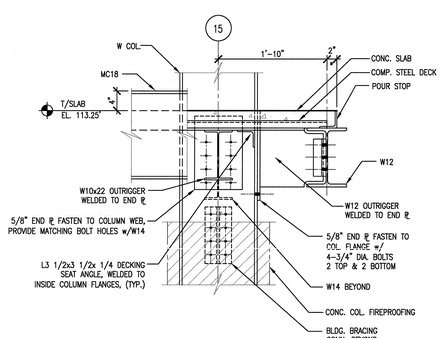

* INDICATES VERIFY/COORDINATE w/ ARCH. DWGS

20 / S2.02.47 SECTION SCALE: 1"=1'-0" SDT051001-5A

S2.02.49

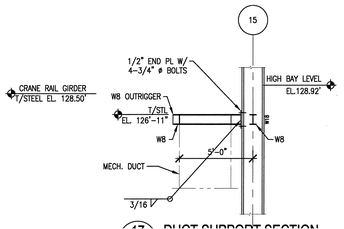

17 / S1.05.30 DUCT SUPPORT SECTION SCALE: 1/4"=1'-0" SDT051003-5A

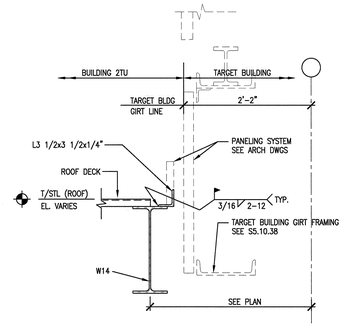

18 / S2.09.50 SECTION SCALE: 1"=1'-0" SDT051016-5A

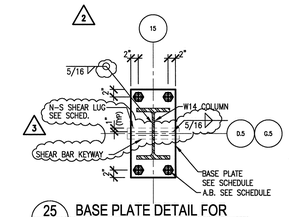

25 / S5.20.30 BASE PLATE DETAIL FOR D.5-15 & G.5-15 SCALE: NONE

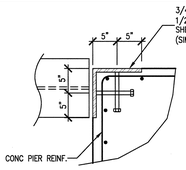

11 / S2.B1.48 EMBEDDED PLATE DETAIL SCALE: NONE SDT051001-5A

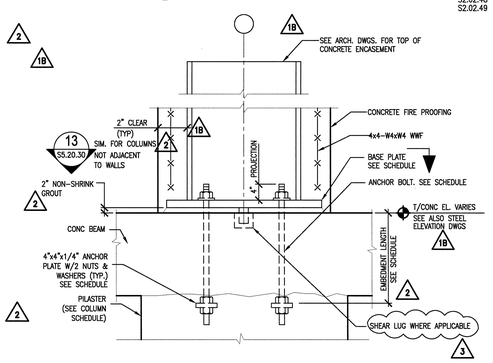

12 / – SECTION THRU COLUMN-PILASTER SCALE: NONE SDT051014-5A

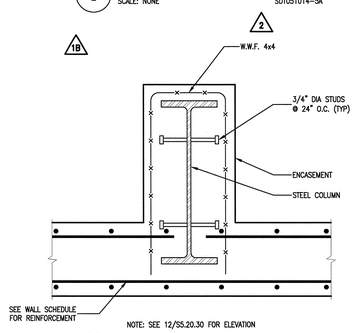

NOTE: SEE 12/S5.20.30 FOR ELEVATION

13 / S5.20.30 PLAN AT COLUMN ENCASEMENT SCALE: NONE SDT051014-5A

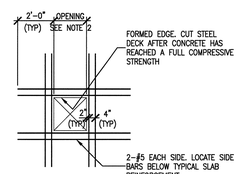

NOTE: 1. OPENING 8" DIAMETER OR LESS REQUIRE NO REINFORCEMENT.
2. COORDINATE SIZE AND LOCATION OF OPENINGS WITH THE CONTRACTOR RESPONSIBLE FOR THE ASSOCIATED WORK.

14 / S2.02.41 TYPICAL COMPOSITE STEEL DECK SLAB OPENING SCALE: NONE SDT051002-5A

S2.02.43
S2.02.44
S2.02.46
S2.02.48

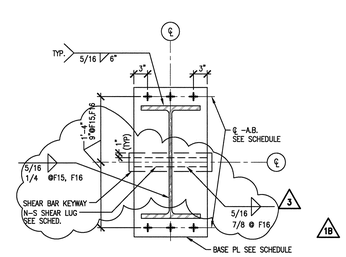

NOTE: SEE 12/S5.20.30 FOR ELEVATION

15 / – BASE PLATE DETAIL FOR W24 COLUMN SCALE : NONE SDT051014-5A

NOTE: 1. BOTTOM/BASE PLATE EL.+97'-1"

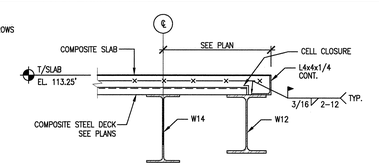

6 / S2.02.47 SECTION SCALE: 1"=1'-0" SDT051016-5A

S2.02.48
S2.02.49

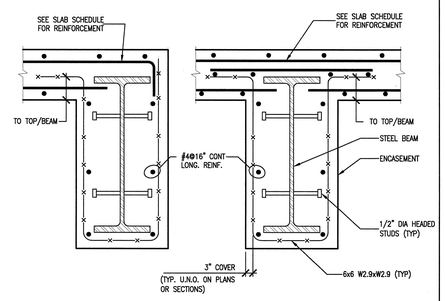

1 / S2.03.45 TYPICAL BEAM ENCASEMENT SCALE: NONE SDT051014-5A

S2.03.42
S2.03.48

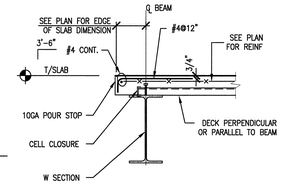

7 / S2.03.48 TYPICAL SLAB EDGE (U.N.O.) SCALE: 1"=1'-0" SDT051016-5A

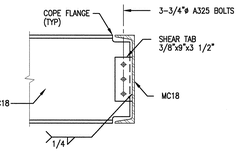

8 / S2.02.41 SECTION @ MC18 TO MC18 CONNECTION SCALE: 1"=1'-0" SDT051016-5A

THRU S2.02.49

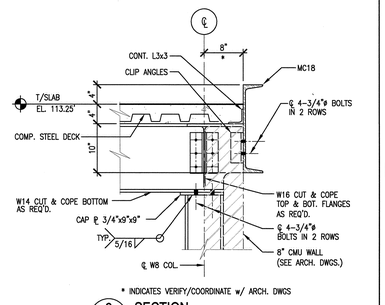

* INDICATES VERIFY/COORDINATE w/ ARCH. DWGS

2 / S2.02.47 SECTION SCALE: 1"=1'-0" SDT051001-5A

S2.02.49

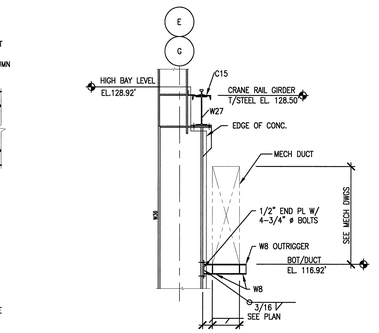

9 / S2.02.42 TYPICAL DUCT SUPPORT SECTION SCALE: 1"=1'-0" SDT051003-5A

S2.02.45, S2.02.48

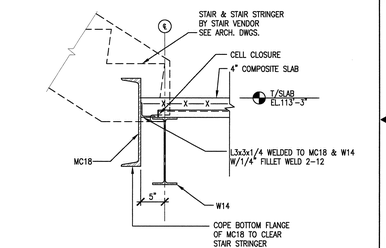

3 / S2.02.41 SECTION SCALE: 1"=1'-0" SDT051001-5A

S2.02.43

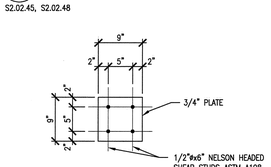

ELEVATION

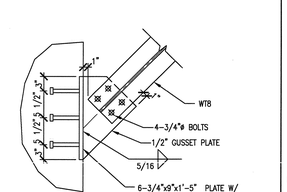

5 / S4.21.38 SECTION SCALE: 1"=1'-0" SDT051001-5A

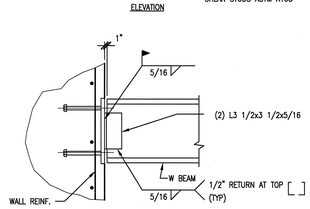

SECTION

10 / S2.B1.46 EMBEDDED PLATE DETAIL SCALE: NONE SDT051001-5A

SCALE 1" = 1'-0"

SCALE: 1/4" = 1'-0"

NO REPRESENTATION OR WARRANTY, EXPRESSED OR IMPLIED, IS MADE AS TO THE ACCURACY, COMPLETENESS OR USEFULNESS OF THE INFORMATION OR STATEMENTS CONTAINED IN THESE DRAWINGS, OR THAT THE USE OR DISCLOSURE OF ANY INFORMATION, APPARATUS, METHOD, OR PROCESS DISCLOSED IN THESE DRAWINGS MAY NOT INFRINGE PRIVATE RIGHTS OF OTHERS. NO LIABILITY IS ASSUMED WITH RESPECT TO THE USE OF, OR FOR DAMAGES RESULTING FROM THE USE OF ANY INFORMATION, APPARATUS, METHOD, OR PROCESS DISCLOSED IN THESE DRAWINGS. DRAWINGS MADE AVAILABLE FOR INFORMATION TO BIDDER ARE NOT TO BE USED FOR OTHER PURPOSES AND ARE TO BE RETURNED UPON REQUEST OF THE FORWARDING CONTRACTOR.

NUMBER OF SECTION OR DETAIL — DRAWING ON WHICH SECTION OR DETAIL IS SHOWN OR TAKEN

SECTION AND DETAIL KEY

THIS DOCUMENT CONTROLLED BY

CHANGE CONTROL SYSTEM 3

ENGINEERING PROCEDURE SNS-ENG-G001

REV	CHANGE TYPE	CHANGE CONTROL SYSTEM	CHANGE CONTROL NUMBER	DESCRIPTION	DSN	CHK	DEPT	DATE	PE	DATE	PJ	DATE	REQ	DATE	UTB	DATE	RPE	RPE NO	DATE
3	A	3	24	DCN T5-024 – 04/18/02	GPR	REW									JJB		23236	4/18/02	
2	A	3	18	DCN T5-018 – 03/01/02	GPR	REW			CLG	3/2	RAD	3/7			JRL	3/2	JJB	23236	3/1/02
1				CERTIFIED FOR CONSTRUCTION – 10/26/01	GPR	REW			CLG	11/15	RAD	11/13			JRL	11/13	JJB	23236	10/26/01
0				SUBSTRUCTURES CERTIFIED FOR CONSTRUCTION – 4/18/01	GPR	REW			CLG	4/18	RAD	4/18			JRL	4/19	JJB	23236	4/17/01

REVISION OR ISSUE PURPOSE — REVISION APPROVALS

GPR	–	–	–	–	–	–	–	–	–	–	–
GPR	–	–	–	–	–	–	–	–	–	–	–
REW		WRS	AK	WRS	BWJ		MP		ED		
SC		WRS	RL	WRS	BWJ		MP		WAS		
ST	CV	EC	EE	EM	IE	M	PD	SE	AR		

SQUAD CHECK

RPE — JOHN BUSCH, REGISTERED ENGINEER, AGRICULTURE, COMMERCE, NO. 23236, STATE OF TENNESSEE

REV. 3 DATE 4/18/02

DSN	G. REDDY	4/17/01
DRW	G.MARSZALEK	4/17/01
CHK	R.WALKINGTON	4/17/01
DEPT		
PE	C. GARREN	4/18/01
PJ	R. DEAN	4/18/01
REQ		
UTB	J. LAWSON	4/19/01

DRAWING APPROVALS

108030700-S8E-8700-A087

Knight/Jacobs Joint Venture
701 Scarboro Road, MS 8253
Oak Ridge, TN 37830
865-241-9433
fax 865-241-3400

KNIGHT
Knight Advanced Technology
549 West Randolph St.
Chicago, IL 60661

UT-BATTELLE
Oak Ridge National Laboratory
managed for the DEPARTMENT OF ENERGY under U.S. GOVERNMENT contract DE-AC05-00OR22725
UT-BATTELLE, LLC, © Oak Ridge, Tennessee

PROJECT NAME:
SPALLATION NEUTRON SOURCE
TARGET BUILDING
SECTIONS AND DETAILS

1	48	49	50	PLANT	BLDG	FL	SH.	OF	TYPE	CLASS
3	S	X	X	8	8700		1	1	S	U
51		52		53	WBS					REV
NC		NA			1.8.3.7		S5.20.30			3

AutoCAD