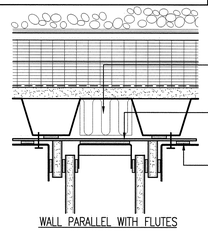

WALL PARALLEL WITH FLUTES

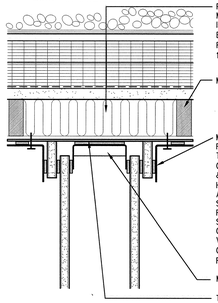

WALL PERPENDICULAR WITH FLUTES

DESIGN REFERENCE:
1-HR WALL: UL SYSTEM HW0D001 (FORMERLY U400T)
2-HR WALL: UL SYSTEM HW0D002 (FORMERLY U400X)

18 A3.30.32 **1-HR & 2-HR @ WALL HEAD** SCALE: 3"= 1'-0" ADT093011-5A

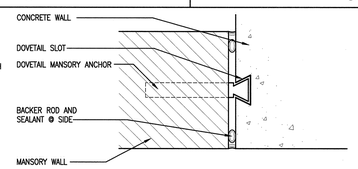

15 A2.B1.45 **MASONRY WALL CONNECT TO CONCRETE WALL** SCALE 3" = 1'-0 ADT093020-5A

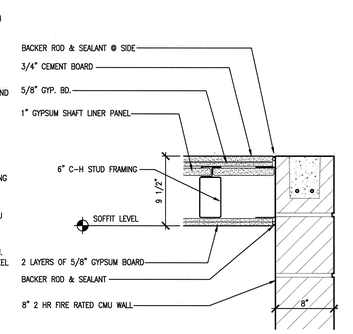

16 A3.30.30 **1 & 2 HR FIRE RATED CEILING @ 8" CMU WALL** SCALE 1-1/2" = 1'-0 ADT093024-5A

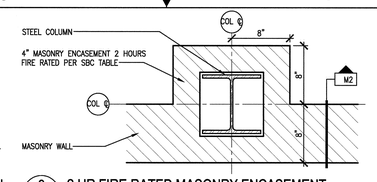

9 A2.01.47 **2 HR FIRE RATED MASONRY ENCASEMENT** SCALE 1-1/2" = 1'-0 ADT093021-5A

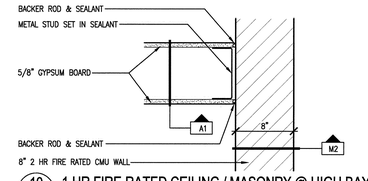

10 A5.30.32 **1 HR FIRE RATED CEILING / MASONRY @ HIGH BAY** SCALE 1-1/2" = 1'-0 ADT093027-5A

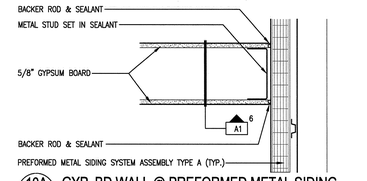

10A **GYP. BD WALL @ PREFORMED METAL SIDING** SCALE 1-1/2" = 1'-0 ADT093028-5A

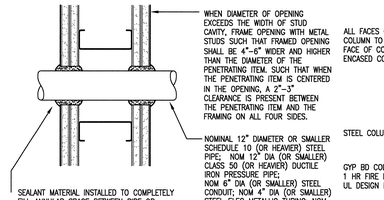

MAX PIPE OR CONDUIT, DIA	ANNULAR SPACE	"F" RATING, HR	"T" RATING, HR
1	0 TO 3/16"	1 OR 2	0, 1 OR 2
1	1/4" TO 1/2"	3 OR 4	3 OR 4
4	0 TO 1-1/2"	1 OR 2	0
6	1/4" TO 1/2"	3 OR 4	0
12	3/16" TO 3/8"	1 OR 2	0

UL SYSTEM NO. W-L-1001

5 A9.30.30 **PIPE @ RATED STUD WALL** SCALE: 3" = 1'- 0" ADT093014-5A

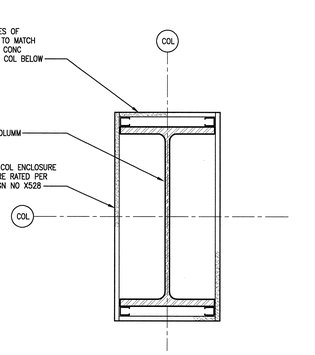

1 **1 HR FIRE RATED COL. ENCLOSURE** SCALE 1-1/2" = 1'-0 ADT093025-5A

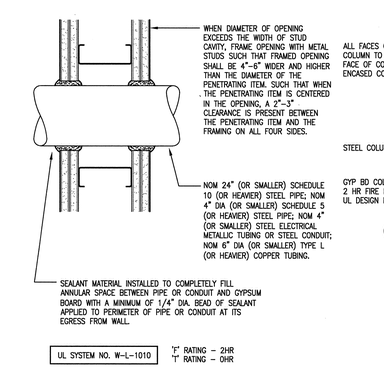

UL SYSTEM NO. W-L-1010 "F" RATING - 2HR "T" RATING - 0HR

6 A9.30.30 **PIPE @ RATED STUD WALL** SCALE: 3" = 1'- 0" ADT093015-5A

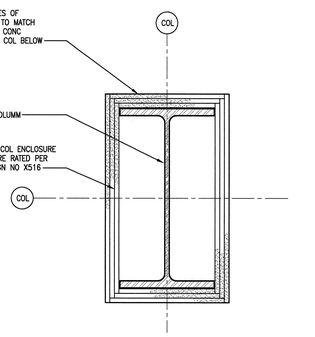

2 A3.30.?? **2 HR FIRE RATED COL. ENCLOSURE** SCALE 1-1/2" = 1'-0 ADT093025-5A

SHEET NOTES (ADT093001-5A)

1. WALL TYPE LEGEND AS PER PLANS

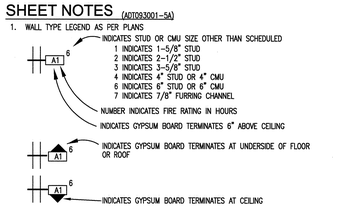

2. AT ALL RATED WALL CONSTRUCTION, ALL LAYERS OF GYPSUM BOARD TO CONTINUE TO UNDERSIDE OF STRUCTURE
3. DEFLECTION LIMITS FOR INTERIOR AND EXTERIOR WALLS AND PARTITION, L/240 PER SBC, TABLE 1610.1

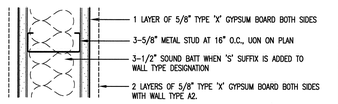

A	NON-RATED PARTITION
A1	1-HR RATED PARTITION - GYP. ASSOCIATION DESIGN WP-1070
A2	2-HR RATED PARTITION - GYP. ASSOCIATION DESIGN WP-1548

A A9.30.30 **WALL TYPE SERIES 'A'** SCALE: 3" = 1'- 0" ADT093002-5A

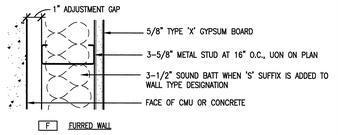

F	FURRED WALL

F A9.30.30 **WALL TYPE SERIES 'F'** SCALE: 3" = 1' - 0" ADT093005-5A

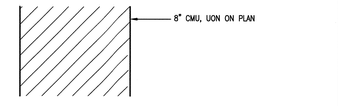

M	NON-RATED CMU WALL
M1	1-HR RATED CMU WALL
M2	2-HR RATED CMU WALL
M4	4-HR RATED CMU WALL

M A9.30.30 **WALL TYPE SERIES 'M'** SCALE: 3"=1'-0" ADT093008-5A

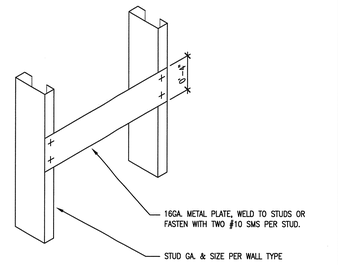

A **BACKING FOR OBJECTS UNDER 25 LBS/LINEAL FT.**

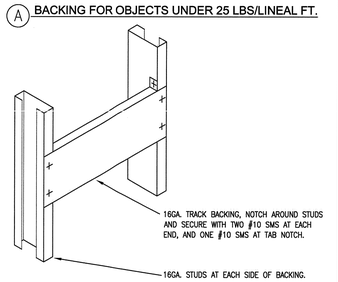

NOTE: ALSO TO BE USED FOR UPPER CABINETS, UON

B **BACKING FOR OBJECTS MAX. OF 100 LBS/LINEAL FT.**

-- A9.30.30 **TYPICAL STUD WALL BACKING** SCALE: 1- 1/2" = 1' - 0" ADT093009-5A

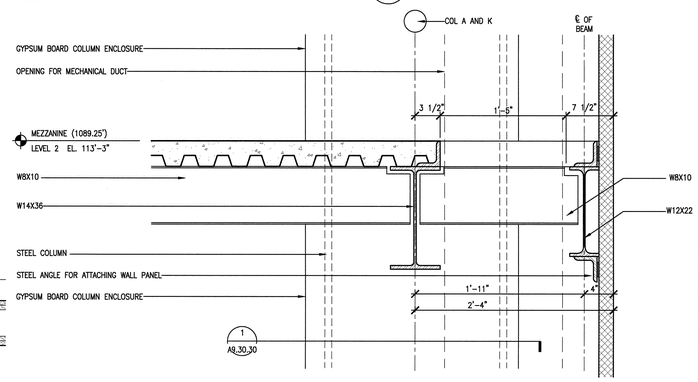

11 A2.02.46 **MEZZANINE @ COLUMN A AND K** SCALE 1-1/2" = 1'-0 ADT051003-5A

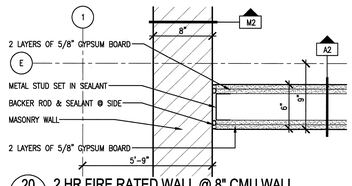

20 A2.04.02 **2 HR FIRE RATED WALL @ 8" CMU WALL** SCALE 1-1/2" = 1'-0 ADT093006-5A

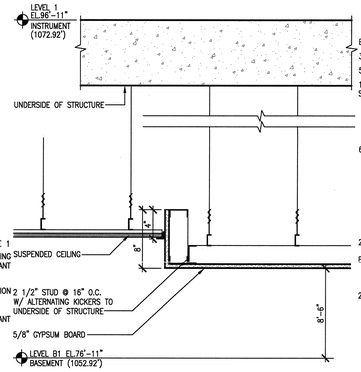

17 A9.30.30 **2 HR FIRE RATED CEILING @ 2 HR GYP BD PART.** SCALE 1-1/2" = 1'-0 ADT093026-5A

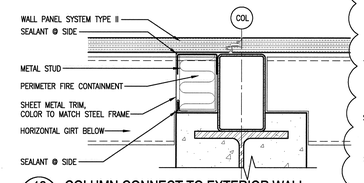

12 A2.01.47 **COLUMN CONNECT TO EXTERIOR WALL** SCALE 1-1/2" = 1'-0 ADT093022-5A

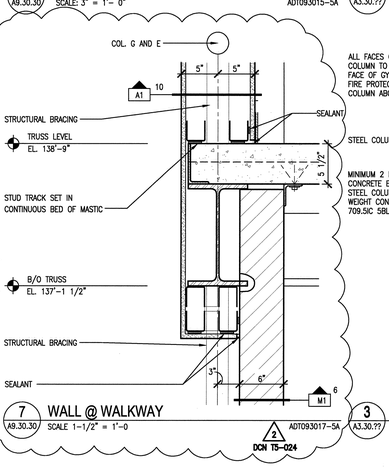

7 A9.30.30 **WALL @ WALKWAY** SCALE 1-1/2" = 1'-0 ADT093017-5A

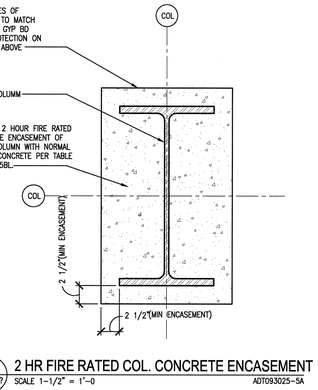

3 A3.30.?? **2 HR FIRE RATED COL. CONCRETE ENCASEMENT** SCALE 1-1/2" = 1'-0 ADT093025-5A

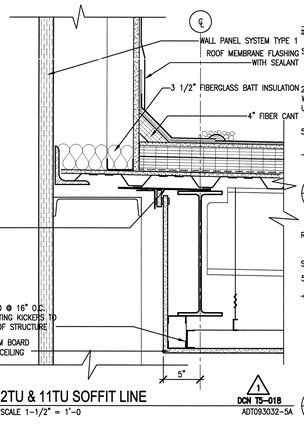

23 A6.10.50 **2TU & 11TU SOFFIT LINE** SCALE 1-1/2" = 1'-0 ADT093032-5A

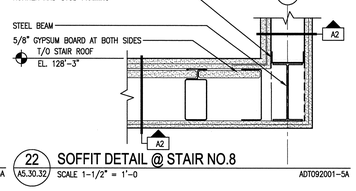

22 A5.30.32 **SOFFIT DETAIL @ STAIR NO.8** SCALE 1-1/2" = 1'-0 ADT092001-5A

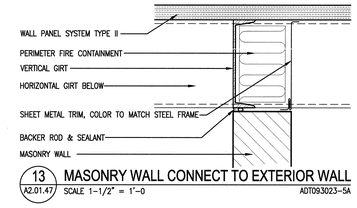

13 A2.01.47 **MASONRY WALL CONNECT TO EXTERIOR WALL** SCALE 1-1/2" = 1'-0 ADT093023-5A

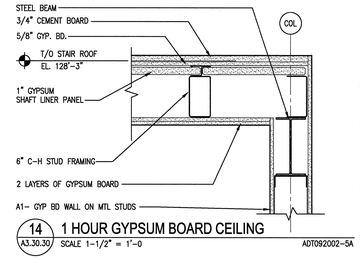

14 A3.30.30 **1 HOUR GYPSUM BOARD CEILING** SCALE 1-1/2" = 1'-0 ADT092002-5A

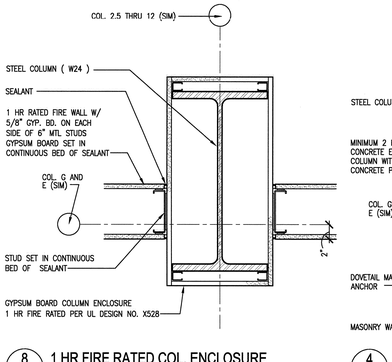

8 A9.30.30 **1 HR FIRE RATED COL. ENCLOSURE** SCALE 1-1/2" = 1'-0 ADT093018-5A

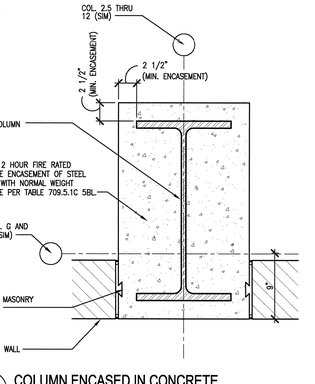

4 A9.30.30 **COLUMN ENCASED IN CONCRETE** SCALE 1-1/2" = 1'-0 ADT093019-5A

NO REPRESENTATION OR WARRANTY, EXPRESSED OR IMPLIED, IS MADE AS TO THE ACCURACY, COMPLETENESS OR USEFULNESS OF THE INFORMATION OR STATEMENTS CONTAINED IN THESE DRAWINGS, OR THAT THE USE OR DISCLOSURE OF ANY INFORMATION, APPARATUS, METHOD, OR PROCESS DISCLOSED IN THESE DRAWINGS MAY NOT INFRINGE PRIVATE RIGHTS OF OTHERS. NO LIABILITY IS ASSUMED WITH RESPECT TO THE USE OF, OR FOR DAMAGES RESULTING FROM THE USE OF ANY INFORMATION, APPARATUS, METHOD, OR PROCESS DISCLOSED IN THESE DRAWINGS. DRAWINGS MADE AVAILABLE FOR INFORMATION TO BIDDER ARE NOT TO BE USED FOR OTHER PURPOSES AND ARE TO BE RETURNED UPON REQUEST OF THE FORWARDING CONTRACTOR.

NUMBER OF SECTION OR DETAIL
DRAWING ON WHICH SECTION OR DETAIL IS SHOWN OR TAKEN
SECTION AND DETAIL KEY

THIS DOCUMENT CONTROLLED BY
CHANGE CONTROL SYSTEM 3
ENGINEERING PROCEDURE SNS-ENG-G001

REV	CHANGE TYPE	CHANGE CONTROL SYSTEM	CHANGE REQUEST NUMBER	DESCRIPTION	DSN	CHK	DEPT	DATE	PE	DATE	PJ	DATE	REQ	DATE	UTB	DATE	RPE	RPE NO	DATE	ST	CV	EC	EE	EM	IE	M	PD	SE	AR
2	A	3	24	DCN T5-024 - 4/18/02	AG	ED			4/18/02	RAD	4/18/02				4/19/02	RLB	102104	4/18/02											
1	A	3	18	DCN T5-018 - 3/1/02	MBB	ED			GLG	3/02/02	RAD	3/04/02			CLG	3/02/02	RLB	102104	3/1/02	–	–	–	–	–	–	–	–	–	ED
0				CERTIFIED FOR CONSTRUCTION - 10/26/01	MBB	ED			CLG	11/15/01	RAD	11/13/01			JRL	11/13/01	RLB	102104	11/13/01	REW	–	WRS	AK	WRS	EWJ	–	MP	–	ED

REVISION OR ISSUE PURPOSE — REVISION APPROVALS — SQUAD CHECK

RPE: ROBERT L. BARNES, REGISTERED ARCHITECT, STATE OF TENNESSEE, NO. 102104 — 10/24/02

DSN	M. BRADLEY	10/26/01
DRW	I. WANG	10/26/01
CHK	E.DENSON	10/26/01
DEPT		
PE	C. GARREN	11/15/01
PJ	R. DEAN	11/13/01
REQ		
UTB	J. LAWSON	11/13/01

REV. DATE — DRAWING APPROVALS

108030700-A8E-8700-A113

Knight Jacobs — Knight/Jacobs Joint Venture, 701 Scarboro Road, MS 8253, Oak Ridge, TN 37830, 865-241-9433, fax 865-241-3400

KNIGHT — Knight Advanced Technology, 549 West Randolph St., Chicago, IL 60661

UT-BATTELLE — Oak Ridge National Laboratory managed for the DEPARTMENT OF ENERGY under U.S. GOVERNMENT contract DE-AC05-00OR22725 UT-BATTELLE, LLC. © Oak Ridge, Tennessee

PROJECT NAME: SPALLATION NEUTRON SOURCE

TARGET BUILDING
PARTITION SCHEDULE & DETAILS

1	48	49	50	PLANT	BLDG	FL	SH.	OF	TYPE	CLASS	REV
3	A	X	X	8	8700		1	1		U	2

51 NC — 52 NA — 53 — WBS 1.8.3.7 — A9.30.30

Date: 04/18/2002 Time: 17:43:00
Username: BANDW
C:\R22\PROJECTS\8700\700_CADD\700_CADD.MAC,TAS,PLOT,AB-30-30.DWG