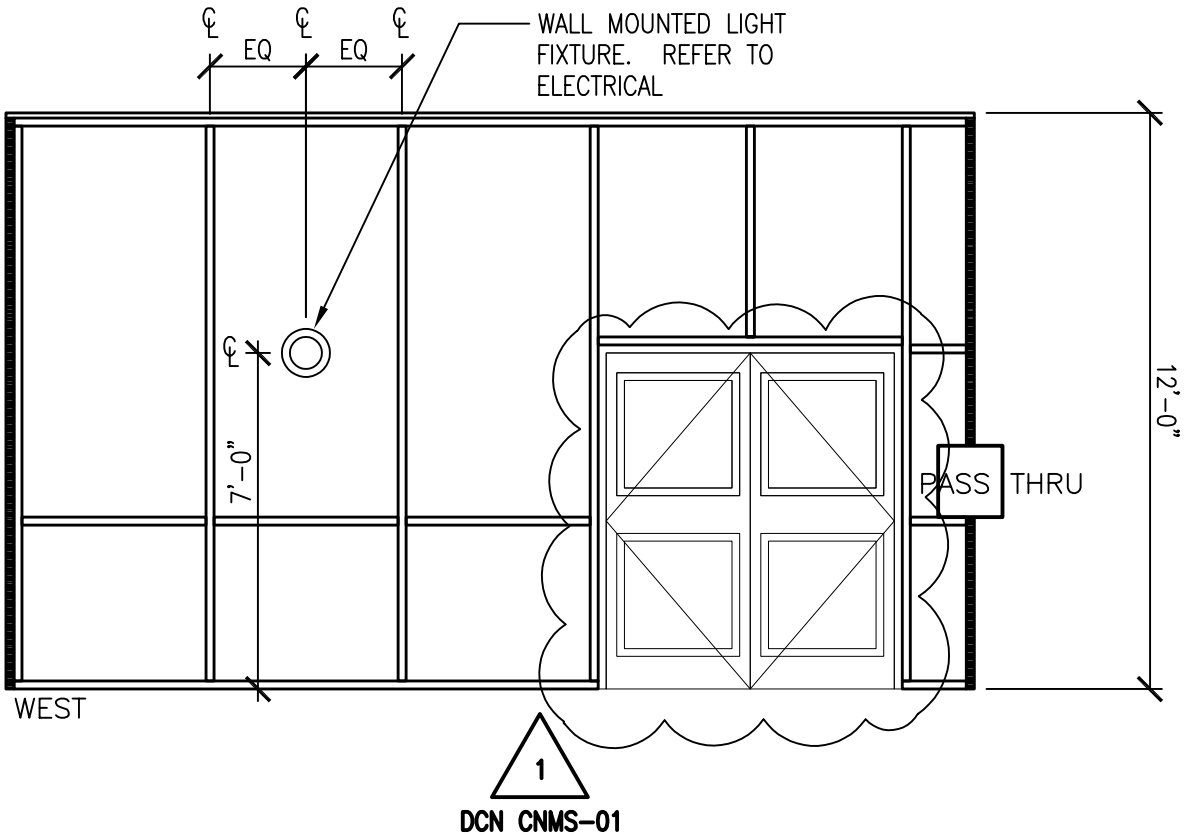

3 A5.12.42

SEM FIB ELEVATIONS 1

1/4"=1'-0"

AEI01K-8

CENTER FOR NANOPHASE MATERIALS SCIENCES

ORNL - CNMS TITLE III

Knight/Jacobs Joint Venture
701 Scarboro Road, MS 8253
Oak Ridge, TN 37830

865-241-9433
fax 865-241-3400

m+w zander

M+W Zander U.S. Operations, Inc.
1820 Preston Park Blvd. Suite 2000
Plano, TX 75093
Telephone: (972) 673-0004
Fax: (972) 673-0005

SKETCH TITLE	SIM FIB		SKETCH NO.	A-SK-004-8	
DATE ISSUED	DRAWN BY	CHECKED BY	DRAWING NO.		DRAWING REV.
4/17/2003	TG	TG	A5.12.42		0
PROJECT NO.	FILE NAME	SCALE	DCN OR RFI NO.		
L0230.30	AEI01K-8	1/4" = 1'-0"	CNMS-01		