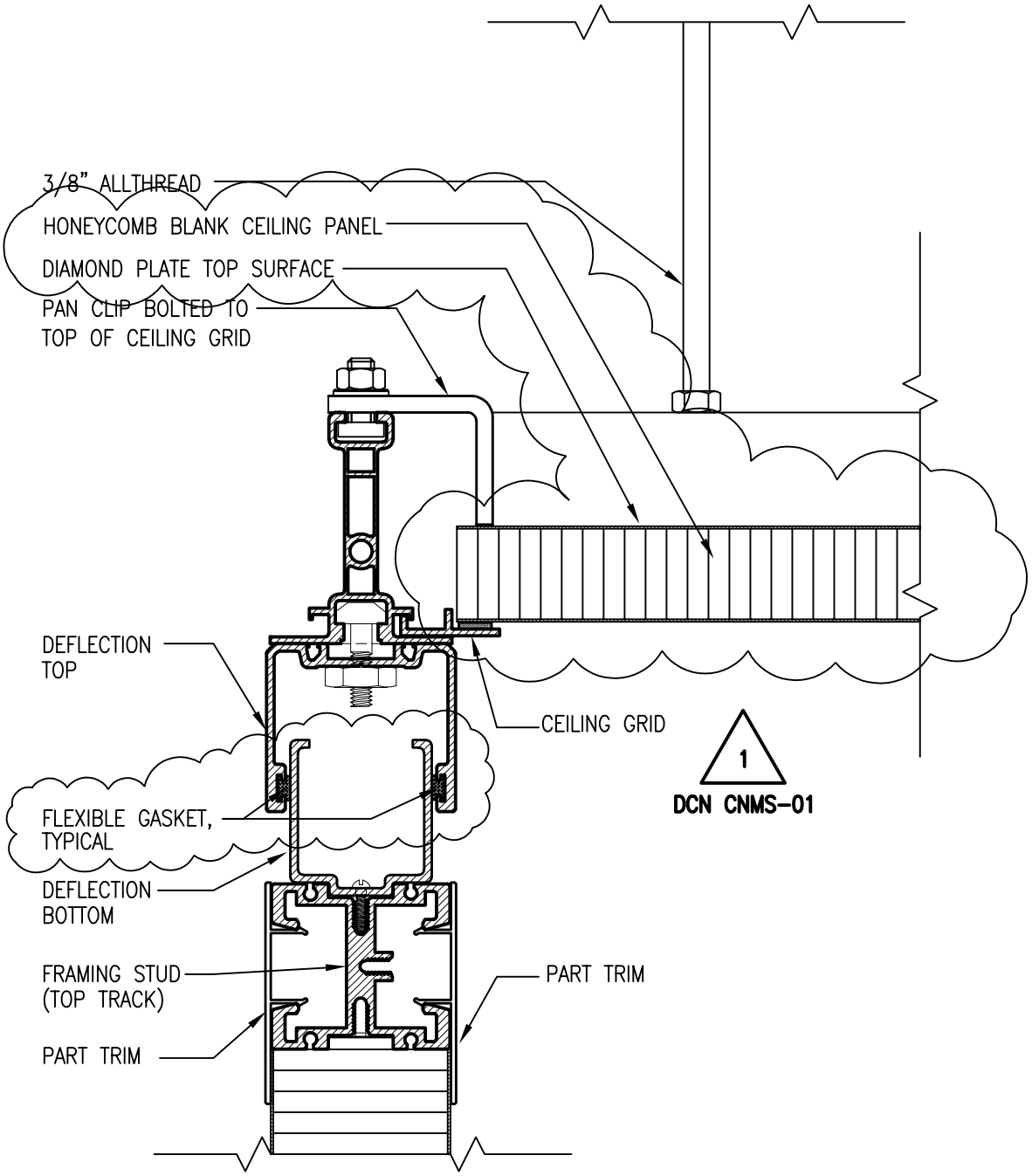

6 BLANK CEILING / WALL CONNECTION

A9.42.40 6" = 1'

AKWS09-8

FROM SHEET A9.42.40

CENTER FOR NANOPHASE MATERIALS SCIENCES

ORNL - CNMS TITLE III

Knight/Jacobs Joint Venture
701 Scarboro Road, MS 8253
Oak Ridge, TN 37830

865-241-9433
fax 865-241-3400

m+w zander

M+W Zander U.S. Operations, Inc.
1820 Preston Park Blvd. Suite 2000
Plano, TX 75093
Telephone: (972) 673-0004
Fax: (972) 673-0005

SKETCH TITLE	BLANK CEILING		SKETCH NO. A-SK-001-8	
DATE ISSUED 4/17/2003	DRAWN BY TG	CHECKED BY TG	DRAWING NO. A9.42.40	DRAWING REV. 0
PROJECT NO. L0230.30	FILE NAME ASWS09-8	SCALE 6" = 1'-0"	DCN OR RFI NO. CNMS-01	