NEXT ASS'Y: FINAL ASS'Y:

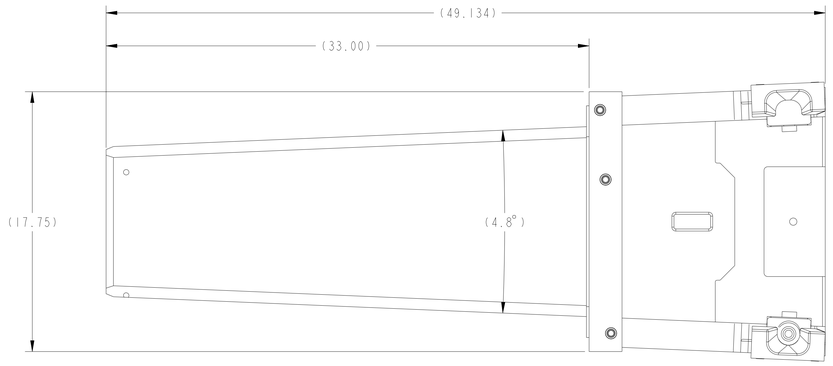

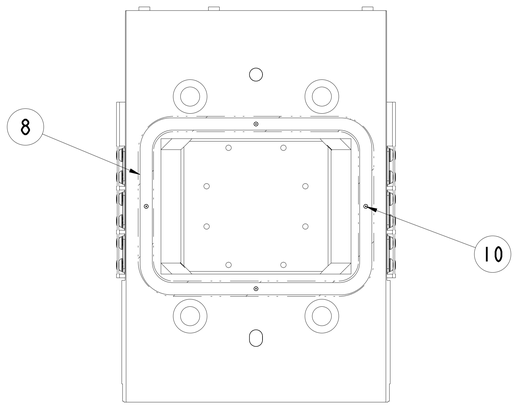

BACK VIEW
SCALE 0.250

NOTES

1. INTERPRET DRAWING PER GLOBAL ENGINEERING DOCUMENTS DRAWING REQUIREMENTS MANUAL.
2. INTERPRET DIMENSIONS AND TOLERANCES PER ASME Y14.5M.
3. DIMENSIONS ARE IN INCHES.
4. UNBRAKO DIV/SPS TECHNOLOGIES, 4444 LEE RD. CLEVELAND OHIO 44128
5. LOCTITE CORPERATION, 1001 TROUT BROOK CROSSING, ROCK HILL, CT 06067-3910
6. McMASTER CARR P.O. BOX 4355, CHICAGO, ILLINOIS 60680
7. BALL GUIDE FASTENERS, FIND NUMBER 9, SHALL BE INSTALLED WITH LOCTITE, FIND NUMBER 12, IN ACCORDANCE TO LOCTITE PROCEDURES, AND TIGHTENED TO 110 FT.-LBS.
8. CORE VESSEL GASKET FASTENERS, FIND NUMBER 10, SHALL BE INSTALLED WITH LOCTITE, FIND NUMBER 17, IN ACCORDANCE TO LOCTITE PROCEDURES, AND TIGHTENED TO 15 FT.-LBS.
9. HELICOFLEX COMPANY, P.O. BOX 9889, COLUMBIA, SC 29290
   (1) 803-783-1880 PHONE
   (1) 803-783-4279 FAX
10. ALL SHIM THICKNESSES SHOWN ARE NOMINAL DIMENSIONS. ACTUAL THICKNESSES SHALL BE DETERMINED AT ASSEMBLY.

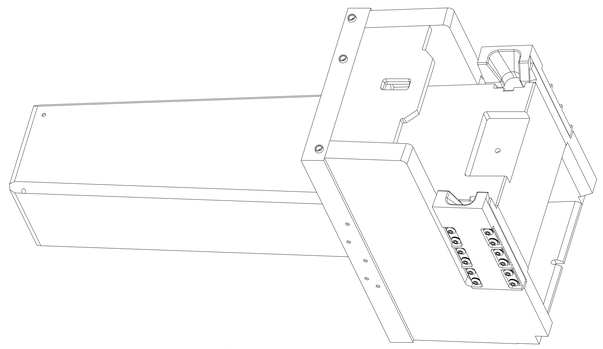

PICTORIAL VIEW
SCALE 0.19

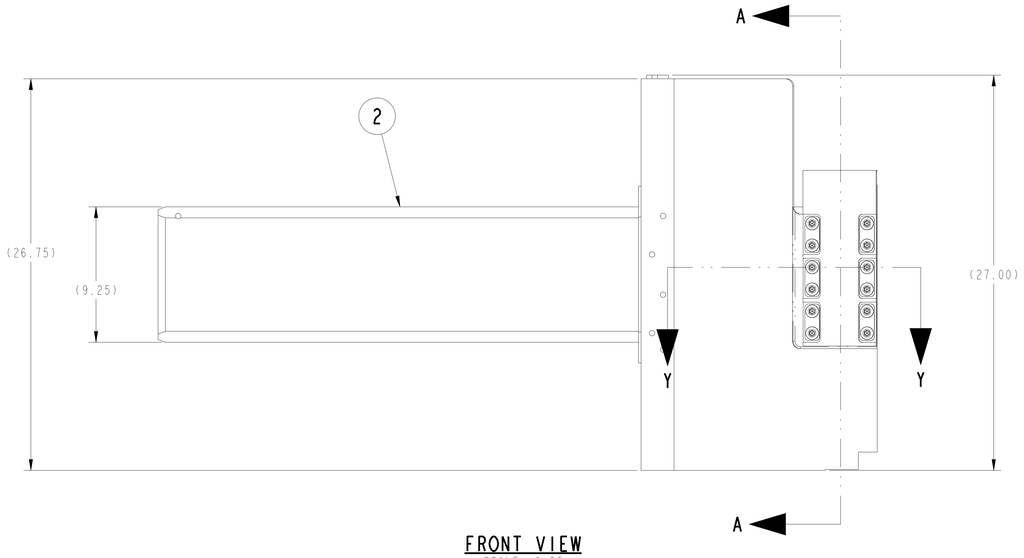

FRONT VIEW
SCALE 0.25

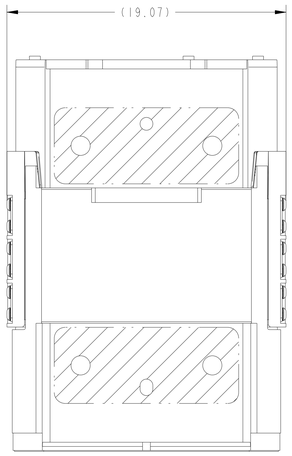

5			1		271-LOCTITE	RETAINING COMPOUND	PURCHASED	---	12
6			24		91074A133	PERMANENT TIGHT LOCK WASHER	STEEL	--	11
4 5 8			4		16990-94C-8U	FHCS #4-40 UNC X 0.50" LG	ALLOY STEEL	AISI 4140	10
5 7			24		S300NA46CAM27835NNCE	BUTTON HEAD CAP SCREW	ALLOY STEEL	ASTM F835	9
9			1		107030600M8E8700A172-1	MULTI C V INS GSKT ASSY	--	--	8
			12		107030600M8E8700A143-1	C.V.I. BACKING PLATE DETAIL	CARBON STEEL	ASTM A36	7
			1		107030600M8E8700A134-1	LEFT SIDE BALL GUIDE	STAINLESS STEEL	316L	6
10			4		107030600M8E8700A133-1	BALL GUIDE SHIM	STAINLESS STEEL	316L	5
			1		107030600M8E8700A132-1	RIGHT SIDE BALL GUIDE	STAINLESS STEEL	316L	4
10			2		107030600M8E8700A129-1	GUIDE LOWER SHIM	STAINLESS STEEL	316L	3
			1		107030600M8E8700A104-1	MULTI C V INSERT PLUG WLDMNT	---	---	2
			1		107030600M8E8700A103-1	MULTI C V INSR PLUG W/ALIGNMENTS	---	---	1
107030600M8E8700A102 / 107030600M8E8700A101		-		CAGE CODE	PART OR IDENTIFYING NO	NOMENCLATURE OR DESCRIPTION	MATERIAL	SPECIFICATION	FIND NO
					NEXT ASSEMBLY	PARTS LIST			

QUALITY VERIFICATION

MECHANICAL AND STRUCTURAL
REFERENCE SNS-QA-G002

QV CLAUSE	DOCUMENTS REQUIRED	APPLICABLE TO PART NO *
303	MATERIAL MILL TEST REPORT	-
325	MATERIAL SELLER CERT	-
326	SPECIAL MATERIAL INSPECTION REPORT	-
205	MANUFACTURING, INSPECTION, AND TEST PLAN	-
312	FIELD INSPECTION AND TEST PLAN	-
321	WELD AND BRAZE INSPECTION REPORT	-
322	HEAT TREAT REPORT (W/CHART)	-
310	LEAK TEST REPORT	-
315	CLEANING CERT	-
318	DEVIATION REQUEST	-
319	NONCONFORMANCE PROCESS	-
323	DIMENSIONAL REPORT	-
330	FUNCTIONAL TEST REPORT	-
:	:	:
:	:	:
:	:	:
:	:	:
:	:	:
100	DOCUMENTATION	-

* SYMBOL X INDICATES APPLICABLE TO ALL PARTS OR ITEMS

QA REP DATE

RPE

REV. XX DATE XX/XX/XX

107030600M8E8700A103

PRELIMINARY

NO REPRESENTATION OR WARRANTY, EXPRESSED OR IMPLIED, IS MADE AS TO THE ACCURACY, COMPLETENESS OR USEFULNESS OF THE INFORMATION OR STATEMENTS CONTAINED IN THESE DRAWINGS, OR THAT THE USE OR DISCLOSURE OF ANY INFORMATION, APPARATUS, METHOD OR PROCESS DISCLOSED IN THESE DRAWINGS MAY NOT INFRINGE PRIVATE RIGHTS OF OTHERS. NO LIABILITY IS ASSUMED WITH RESPECT TO THE USE OF, OR FOR DAMAGES RESULTING FROM THE USE OF, ANY INFORMATION, APPARATUS, METHOD OR PROCESS DISCLOSED IN THESE DRAWINGS. DRAWINGS MADE AVAILABLE FOR INFORMATION TO BIDDER ARE NOT TO BE USED FOR OTHER PURPOSES, AND ARE TO BE RETURNED UPON REQUEST OF THE FORWARDING CONTRACTOR.

P THIS DRAWING PRODUCED ON PRO-ENGINEER

THIS DOCUMENT CONTROLLED BY
CHANGE CONTROL SYSTEM 3
ENGINEERING PROCEDURE SNS-TS-G001

REV	CHANGE TYPE	CHANGE CONTROL SYSTEM	CHANGE REQUEST NUMBER	DESCRIPTION	BY	CHK	SECT	DEPT	DATE	PE	REQ	DOE	PJ
00A	—	3	—	ISSUE FOR COMMENT AND INFORMATION	SMR				11/01				

REVISION OR ISSUE PURPOSE — REVISION APPROVALS

SCALE AS NOTED

TOLERANCES UNLESS OTHERWISE SPECIFIED
FRACTIONS :
XX DECIMALS ±.01
XXX DECIMALS ±.005
ANGLES ±0°15'
BREAK SHARP EDGES .06 MAX
FINISH 125 RMS UNLESS OTHERWISE SPECIFIED

DES	DMW/MEP	11/01
DRW	M.E.PHILLIPS	11/01
CHK	:	:
L3	:	:
L2	:	:
:	T.E.FORNEK	11/01
:	:	:
:	:	:
:	:	:
:	:	:
:	:	:
:	:	:
:	:	:

DRAWING APPROVALS — DATE

ornl Oak Ridge National Laboratory
operated for the DEPARTMENT OF ENERGY under U.S. GOVERNMENT contract DE-AC-05-84OR21400
Oak Ridge, Tennessee

SNS Spallation Neutron Source

SPALLATION NEUTRON SOURCE PROJECT
MULTI CORE VESSEL INSERT
MULTI C V INSR PLUG W/ALIGNMENTS

BLDG	FL	SHT	OF	CLASS
8700	IST	1	2	U

107030600M8E8700A103 — REV 00A

NEXT ASS'Y:

FINAL ASS'Y:

NOTES

SEE SHEET 1 FOR NOTES AND MATERIAL LIST.

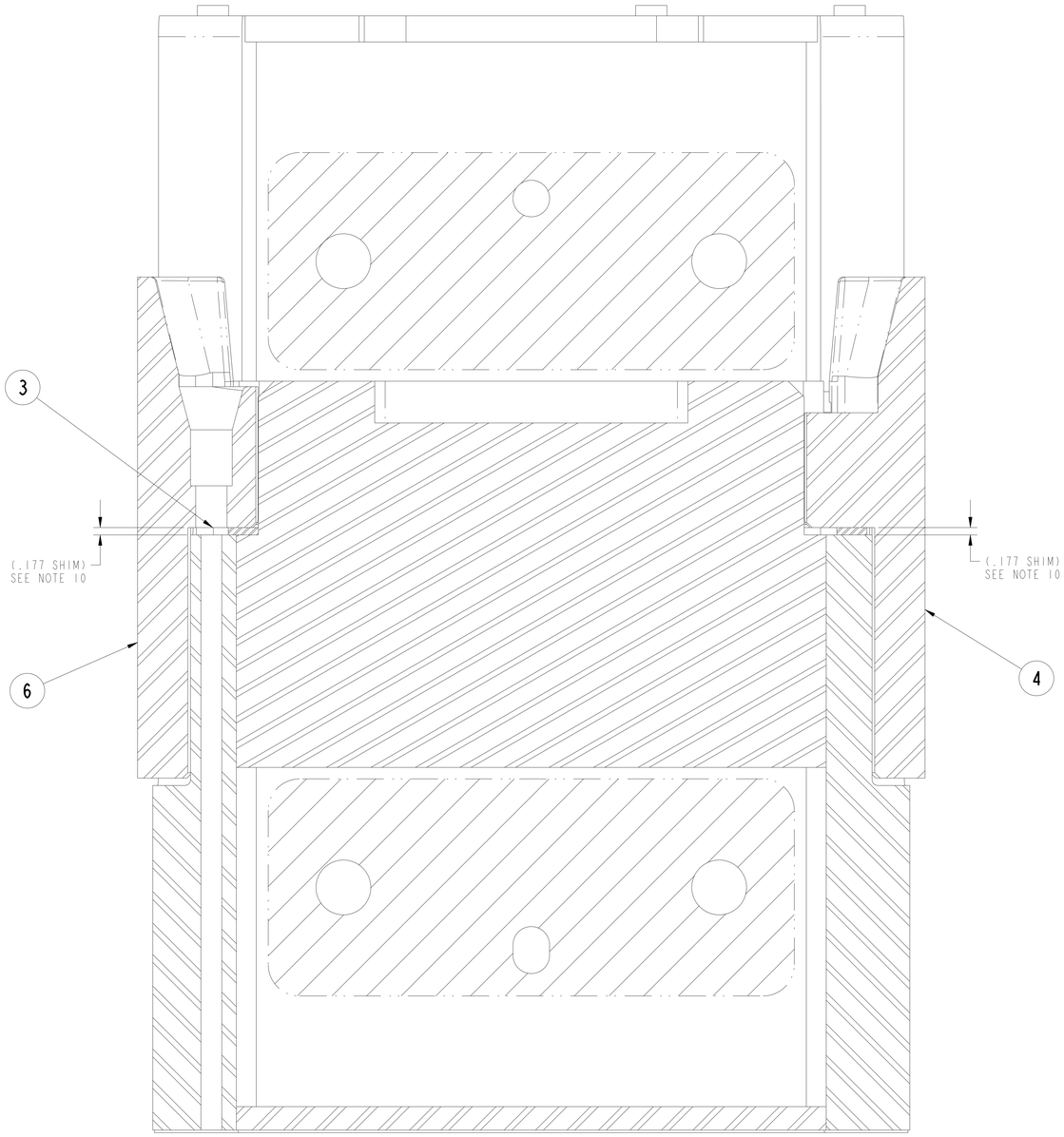

SECTION A-A
SCALE 0.750

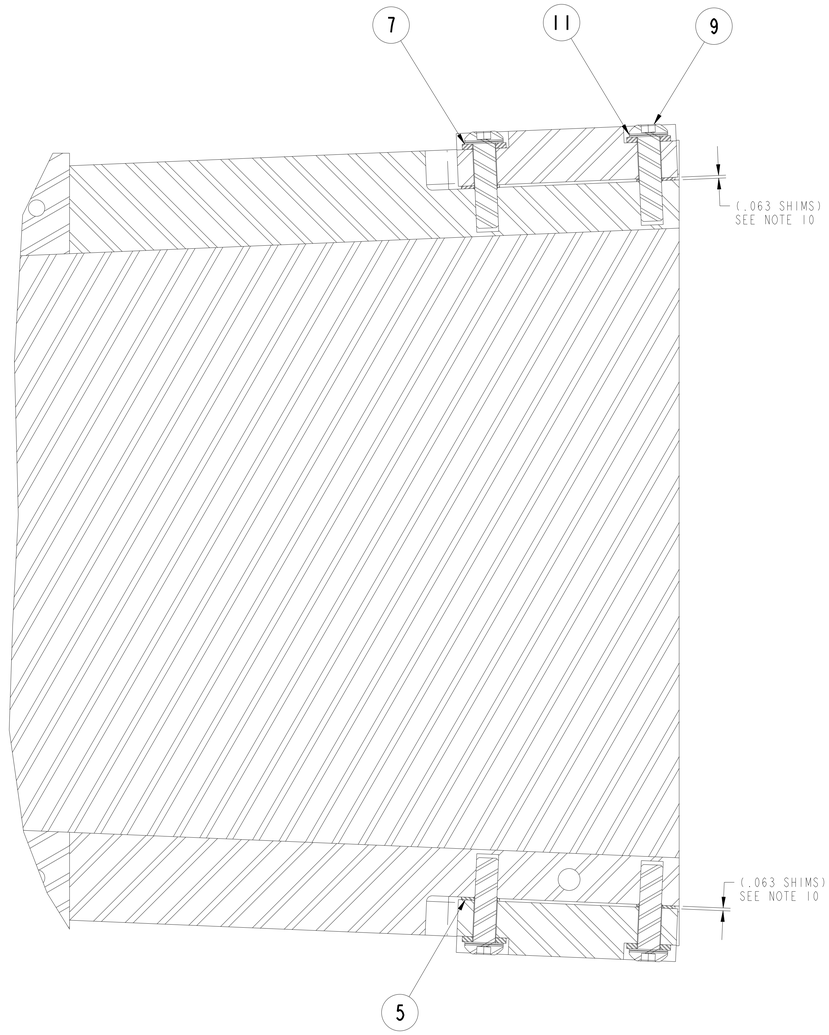

SECTION Y-Y
SCALE 0.750

PRELIMINARY

NO REPRESENTATION OR WARRANTY,EXPRESSED OR IMPLIED,IS MADE AS TO THE ACCURACY, COMPLETENESS OR USEFULNESS OF THE INFORMATION OR STATEMENTS CONTAINED IN THESE DRAWINGS, OR THAT THE USE OR DISCLOSURE OF ANY INFORMATION, APPARATUS, METHOD OR PROCESS DISCLOSED IN THESE DRAWINGS MAY NOT INFRINGE PRIVATE RIGHTS OF OTHERS. NO LIABILITY IS ASSUMED WITH RESPECT TO THE USE OF, OR FOR DAMAGES RESULTING FROM THE USE OF, ANY INFORMATION, APPARATUS, METHOD OR PROCESS DISCLOSED IN THESE DRAWINGS. DRAWINGS MADE AVAILABLE FOR INFORMATION TO BIDDER ARE NOT TO BE USED FOR OTHER PURPOSES, AND ARE TO BE RETURNED UPON REQUEST OF THE FORWARDING CONTRACTOR.

P THIS DRAWING PRODUCED ON PRO-ENGINEER

SCALE AS NOTED

TOLERANCES UNLESS OTHERWISE SPECIFIED

FRACTIONS :
XX DECIMALS ±.01
XXX DECIMALS ±.005
ANGLES ±0°15'
BREAK SHARP EDGES .06 MAX
FINISH 125 RMS UNLESS OTHERWISE SPECIFIED

ornl Oak Ridge National Laboratory
operated for the DEPARTMENT OF ENERGY under U.S. GOVERNMENT contract DE-AC05-00OR22725
Oak Ridge, Tennessee

SNS Spallation Neutron Source

SPALLATION NEUTRON SOURCE PROJECT
MULTI CORE VESSEL INSERT
MULTI C V INSR PLUG W/ALIGNMENTS

BLDG	FL	SHT	OF	CLASS
8700	1ST	2	2	U

107030600M8E8700A103

REV. 00A

107030600M8E8700A103