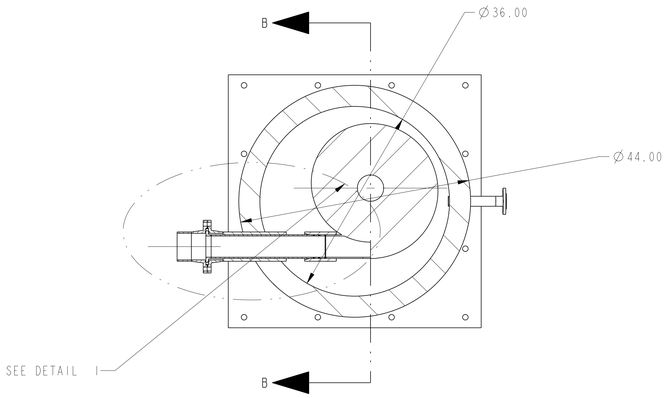

SECTION A-A

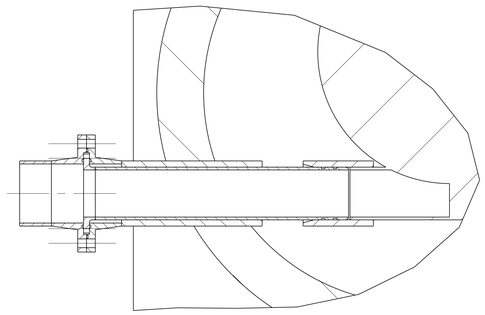

DETAIL 1
SCALE 0.200

NOTES

1. INTERPRET DRAWING PER MECHANICAL ENGINEERING DRAFTING STANDARD ES-3.1-2.
2. INTERPRET DIMENSIONS AND TOLERANCES PER ANSI Y14.5M.
3. DIMENSIONS ARE IN INCHES.

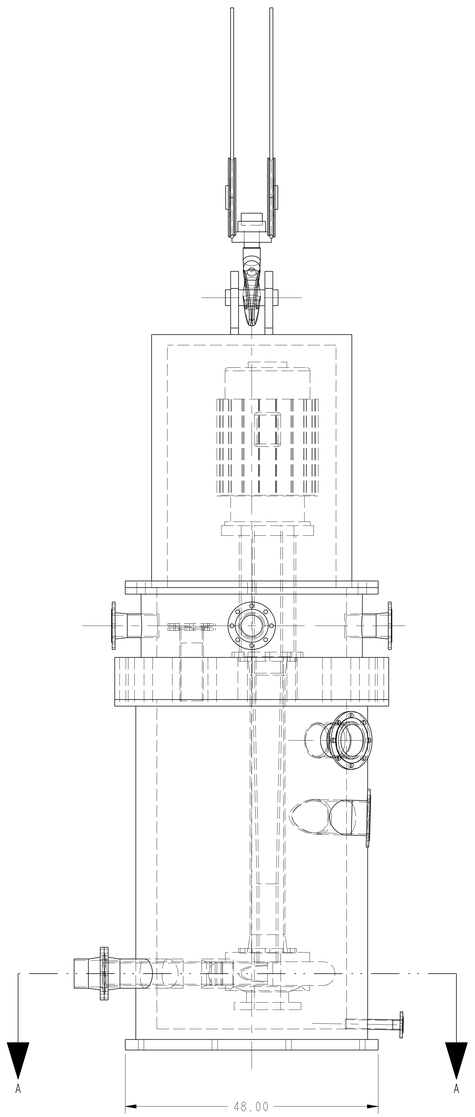

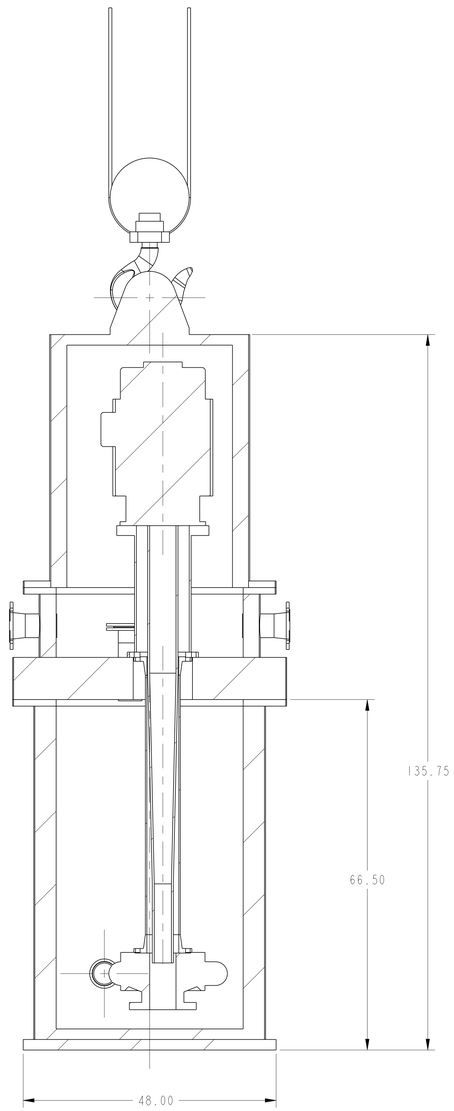

SECTION B-B

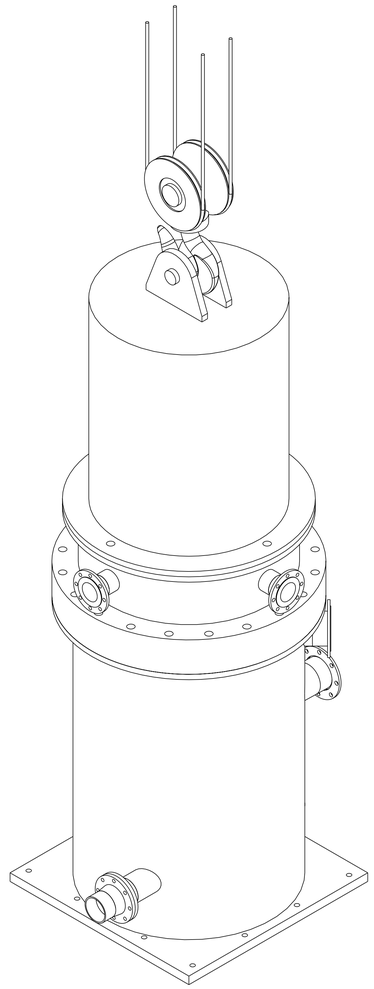

NO REPRESENTATION OR WARRANTY,EXPRESSED OR IMPLIED,IS MADE AS TO THE ACCURACY, COMPLETENESS OR USEFULNESS OF THE INFORMATION OR STATEMENTS CONTAINED IN THESE DRAWINGS, OR THAT THE USE OR DISCLOSURE OF ANY INFORMATION, APPARATUS, METHOD OR PROCESS DISCLOSED IN THESE DRAWINGS MAY NOT INFRINGE PRIVATE RIGHTS OF OTHERS. NO LIABILITY IS ASSUMED WITH RESPECT TO THE USE OF, OR FOR DAMAGES RESULTING FROM THE USE OF, ANY INFORMATION, APPARATUS, METHOD OR PROCESS DISCLOSED IN THESE DRAWINGS. DRAWINGS MADE AVAILABLE FOR INFORMATION TO BIDDER ARE NOT TO BE USED FOR OTHER PURPOSES, AND ARE TO BE RETURNED UPON REQUEST OF THE FORWARDING CONTRACTOR.

P THIS DRAWING PRODUCED ON PRO-ENGINEER

THIS DOCUMENT CONTROLLED BY
CHANGE CONTROL SYSTEM 3
ENGINEERING PROCEDURE EP-C-18

REV	CHANGE TYPE	CHANGE CONTROL SYSTEM	CHANGE NOTICE NUMBER	DESCRIPTION	A-E	BY	CHK	SECT	DEPT	DATE	PE	REQ	DATE	LM-ES	DATE	DOE	DATE	QA	CV	EC	EE	EM	IE	M	PD	SE	ST	XAD	PES
0	-	3	-	GENERAL ISSUE		AVS																						

REVISION OR ISSUE PURPOSE — REVISION APPROVALS — SQUAD CHECK

SCALE 0.1

TOLERANCES UNLESS OTHERWISE SPECIFIED
FRACTIONS ±
XX DECIMALS ±.01
XXX DECIMALS ±.005
ANGLES ±0°15'
BREAK SHARP EDGES .06 MAX
FINISH .125 UNLESS OTHERWISE SPECIFIED

DES	A.SMIRNOV	
DRW	A.SMIRNOV	
CHK		
SECT		
DEPT		
PE		
CR		
PJ		
REQ		

DRAWING APPROVALS — DATE

LOCKHEED MARTIN — LOCKHEED MARTIN ENERGY SYSTEMS, INC.
operated for the DEPARTMENT OF ENERGY under U.S. GOVERNMENT contract DE-AC-05-84OR21400
Oak Ridge, Tennessee • Paducah, Kentucky

PROJECT NAME
SNS TARGET SYSTEM

TARGET ASSEMBLY
WBS 6.1.2 TARGET PROCESS SYSTEMS
MERCURY PUMP

1	48	49	50	PLANT	BLDG	FL	SHT	OF	TYPE	CLASS
3	M	E	U				1	2		

51	52	53	
			M3E087000B-520

REV 0

M3E087000B-520

NOTES

1. INTERPRET DRAWING PER MECHANICAL ENGINEERING DRAFTING STANDARD ES-3.1-2.
2. INTERPRET DIMENSIONS AND TOLERANCES PER ANSI Y14.5M.
3. DIMENSIONS ARE IN INCHES.

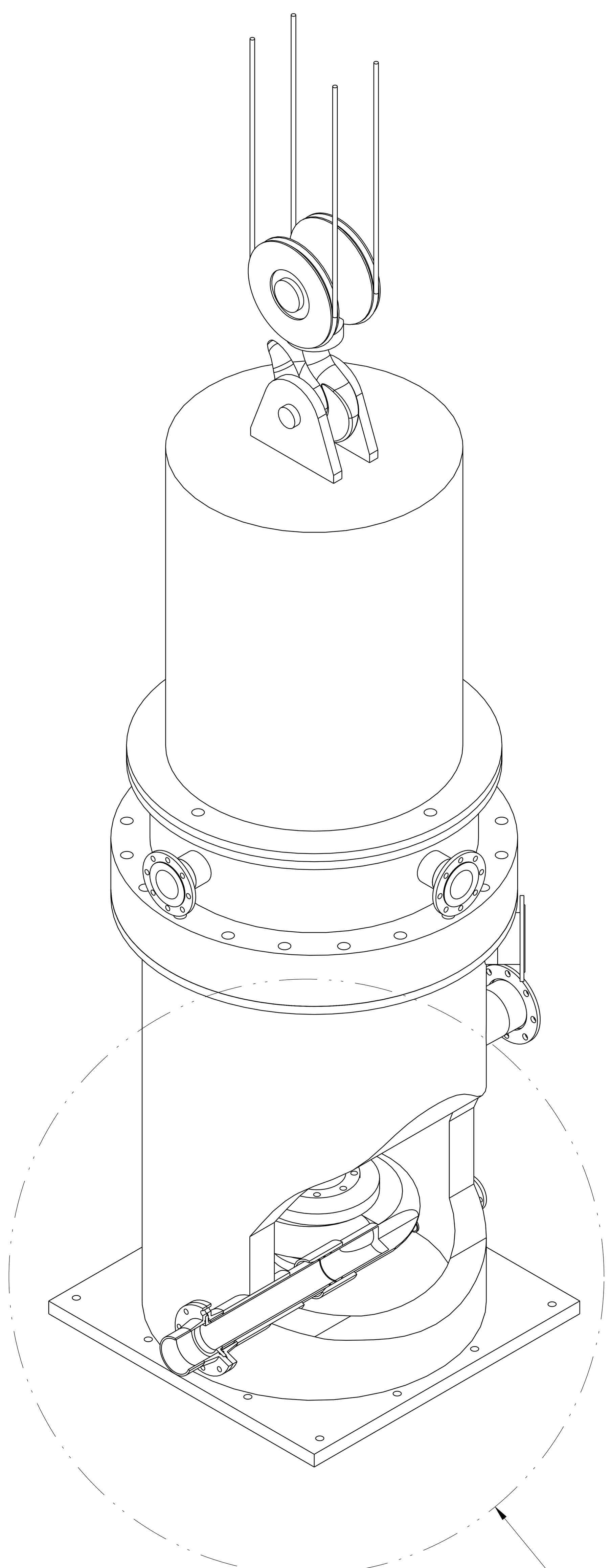

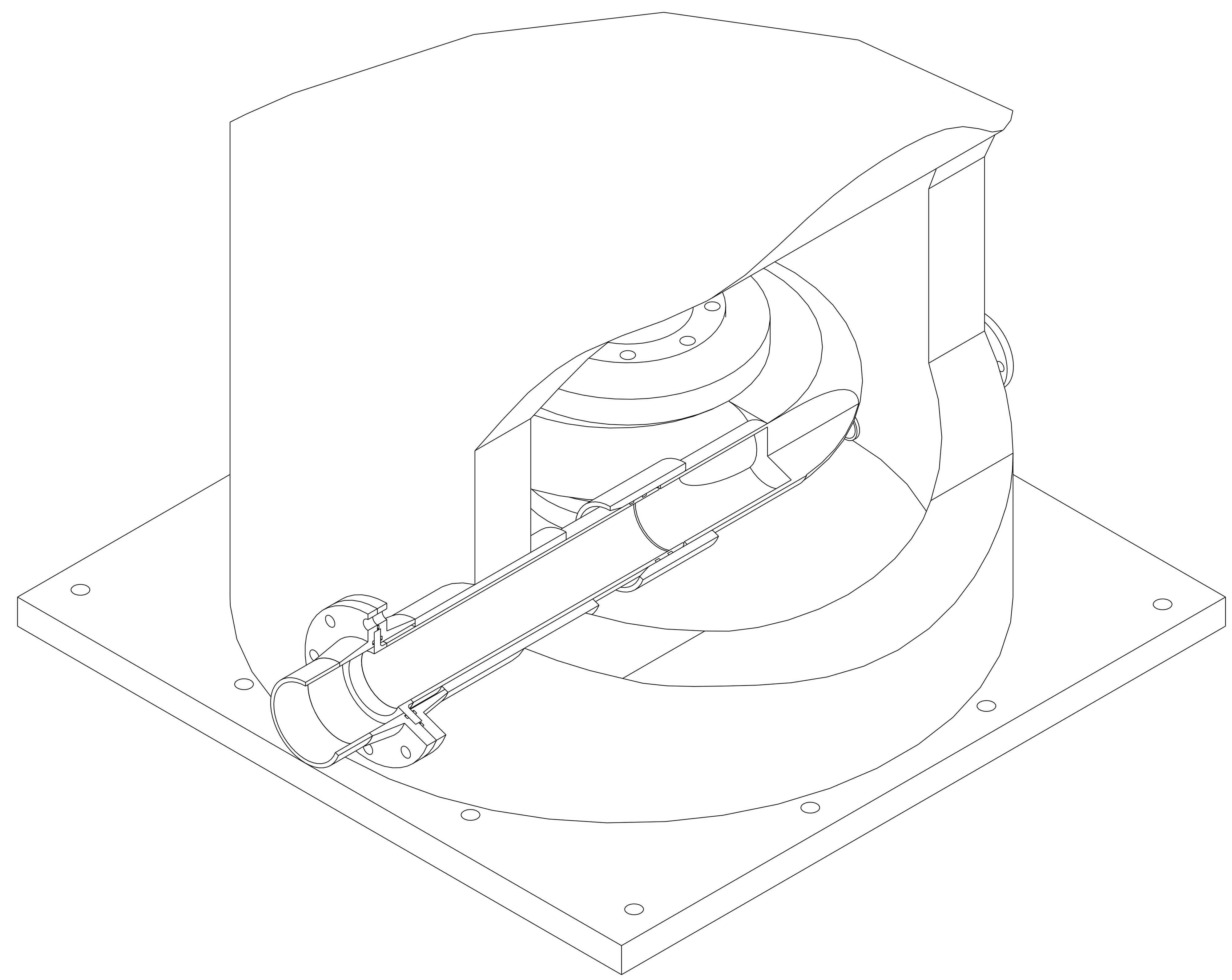

DETAIL 1
SCALE 0.250

NO REPRESENTATION OR WARRANTY, EXPRESSED OR IMPLIED, IS MADE AS TO THE ACCURACY, COMPLETENESS OR USEFULNESS OF THE INFORMATION OR STATEMENTS CONTAINED IN THESE DRAWINGS, OR THAT THE USE OR DISCLOSURE OF ANY INFORMATION, APPARATUS, METHOD OR PROCESS DISCLOSED IN THESE DRAWINGS MAY NOT INFRINGE PRIVATE RIGHTS OF OTHERS. NO LIABILITY IS ASSUMED WITH RESPECT TO THE USE OF, OR FOR DAMAGES RESULTING FROM THE USE OF, ANY INFORMATION, APPARATUS, METHOD OR PROCESS DISCLOSED IN THESE DRAWINGS. DRAWINGS MADE AVAILABLE FOR INFORMATION TO BIDDER ARE NOT TO BE USED FOR OTHER PURPOSES, AND ARE TO BE RETURNED UPON REQUEST OF THE FORWARDING CONTRACTOR.

P THIS DRAWING PRODUCED ON PRO-ENGINEER

THIS DOCUMENT CONTROLLED BY
CHANGE CONTROL SYSTEM 3
ENGINEERING PROCEDURE EP-C-18

REV	CHANGE TYPE	CHANGE CONTROL SYSTEM	CHANGE REQUEST NUMBER	DESCRIPTION	A-E	BY	CHK	SECT	DEPT	DATE	PE	REQ	DATE	LM-ES	DATE	DOE	DATE	QA	CV	EC	EE	EM	IE	M	PD	SE	ST	XAD	PES
0	-	3	-	GENERAL ISSUE		AVS																							

REVISION OR ISSUE PURPOSE | REVISION APPROVALS | SQUAD CHECK

SCALE 0.1

TOLERANCES UNLESS OTHERWISE SPECIFIED
FRACTIONS :
XX DECIMALS ±.01
XXX DECIMALS ±.005
ANGLES ±0°15'
BREAK SHARP EDGES .06 MAX
FINISH .125 UNLESS OTHERWISE SPECIFIED

DES	A. SMIRNOV	:
DRW	A. SMIRNOV	:
CHK	:	:
SECT	:	:
DEPT	:	:
PE	:	:
CR	:	:
PJ	:	:
REQ	:	:
	:	:
	:	:
	:	:
DRAWING APPROVALS		DATE

LOCKHEED MARTIN LOCKHEED MARTIN ENERGY SYSTEMS, INC.
operated for the DEPARTMENT OF ENERGY under U.S. GOVERNMENT contract DE-AC-05-84OR21400
Oak Ridge, Tennessee • Paducah, Kentucky

PROJECT NAME
SNS TARGET SYSTEM

TARGET ASSEMBLY
WBS 6.1.2 TARGET PROCESS SYSTEMS
MERCURY PUMP

1	48	49	50	PLANT	BLDG	FL	SHT	OF	TYPE	CLASS
3	M	E	U	:	:	:	2	2	:	:

51	52	53		REV
:	:	:	M3E087000B-520	0

M3E087000B-520