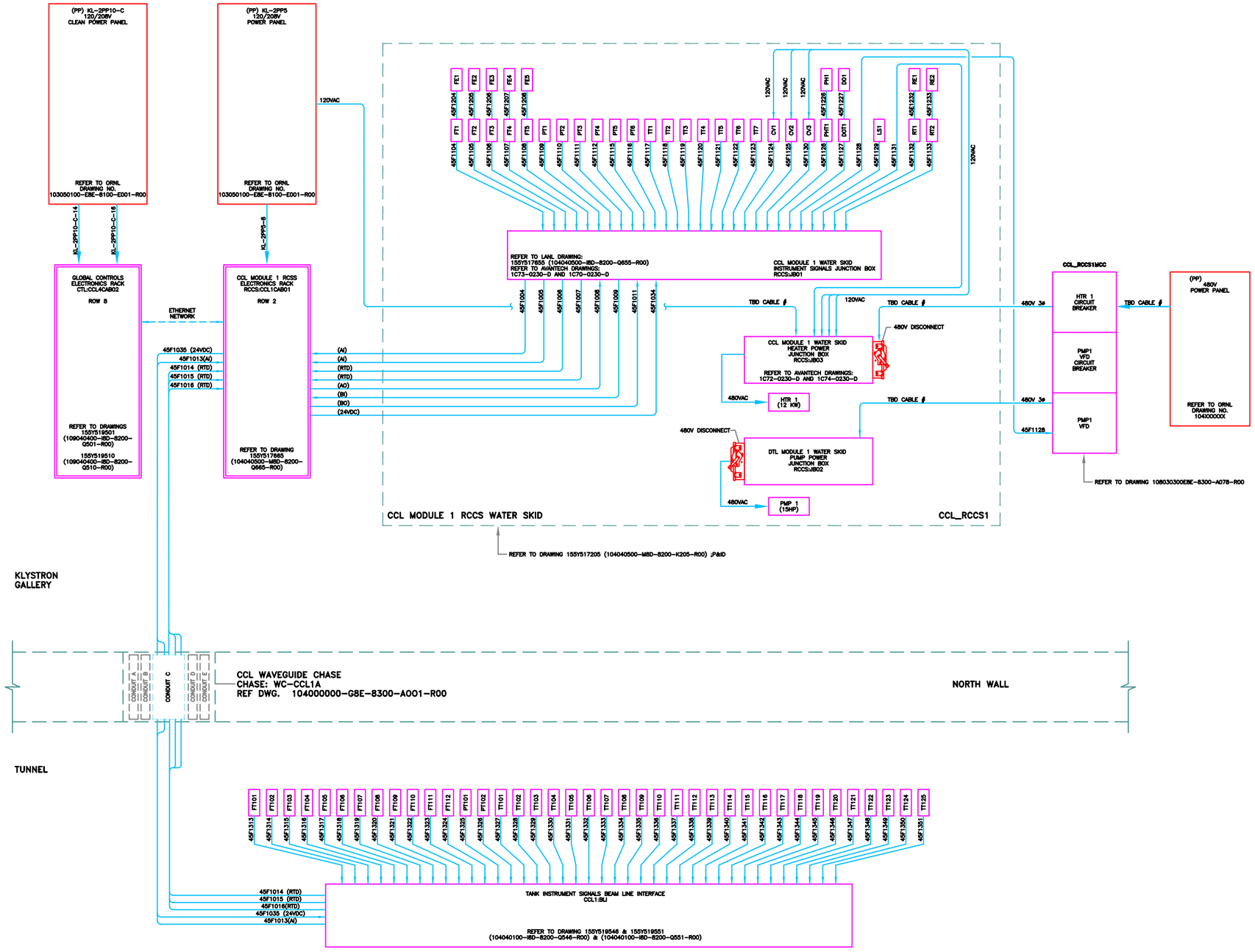

REV	DESCRIPTION	BY	CHK	SECT	DEPT	DATE
	PRELIMINARY	XXX	___	___	___	XX/XX/XX
A	REVISION OR ISSUE PURPOSE	REVISION APPROVALS				

DES	DERRICK WILLIAMS	05/05/03	
DES	PAUL HOLIK	05/05/03	
DWN	DERRICK WILLIAMS	05/05/03	
CHK			
LE			
STL			
DRAWING APPROVALS		DATE	

Oak Ridge National Laboratory
operated for the DEPARTMENT OF ENERGY under U.S. GOVERNMENT contract DE-AC-05-84OR21400
Oak Ridge, Tennessee

SNS Spallation Neutron Source

CCL WATER COOLING SYSTEM MODULE 1
SYSTEM BLOCK DIAGRAM

DRAWING NUMBER 104040500-18D-8200-Q660

REV 1