NOTE: "#"is the CCL Module Number.

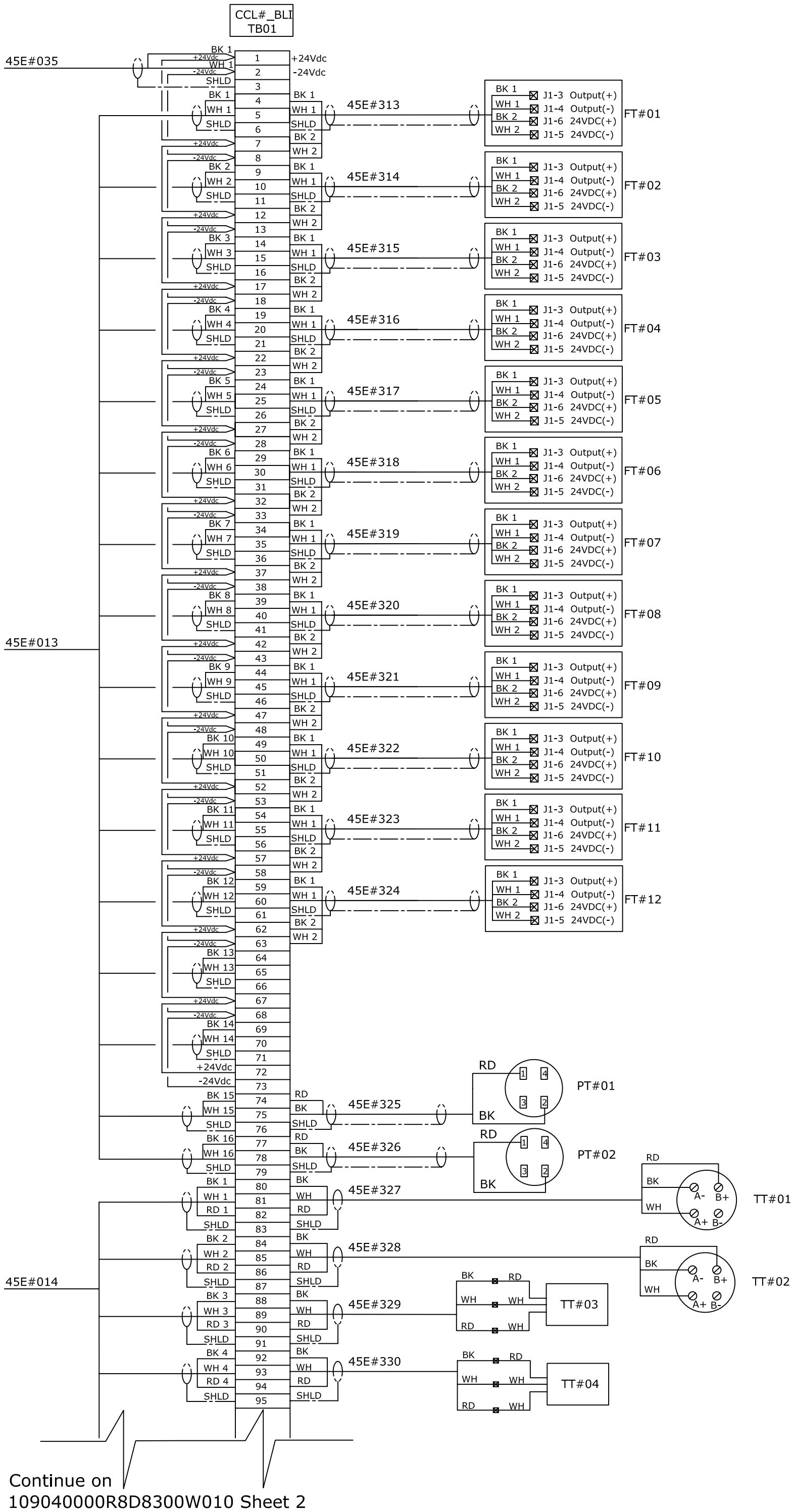

REV	DESCRIPTION
A	PRELIMINARY

REVISION OR ISSUE PURPOSE

REVISION APPROVALS	BY	CHK	SECT	DEPT	DATE
	XXX	—	—	—	XX/XX/XX

DRAWING APPROVALS		DATE
STL	DES	DERRICK WILLIAMS 02/24/04
LE	DWN	DERRICK WILLIAMS 02/24/04
L3TL	CHK	

Oak Ridge National Laboratory
Operated by the UT-Battelle, LLC for the U.S. Department of Energy under Contract DE-AC-05-00OR22725
Spallation Neutron Source
SNS
CCL RCCS CONTROL WIRING
BEAM LINE INTERFACE TB01
Sheet 1
DRAWING NUMBER 109040000R8D8300W010
REV 0