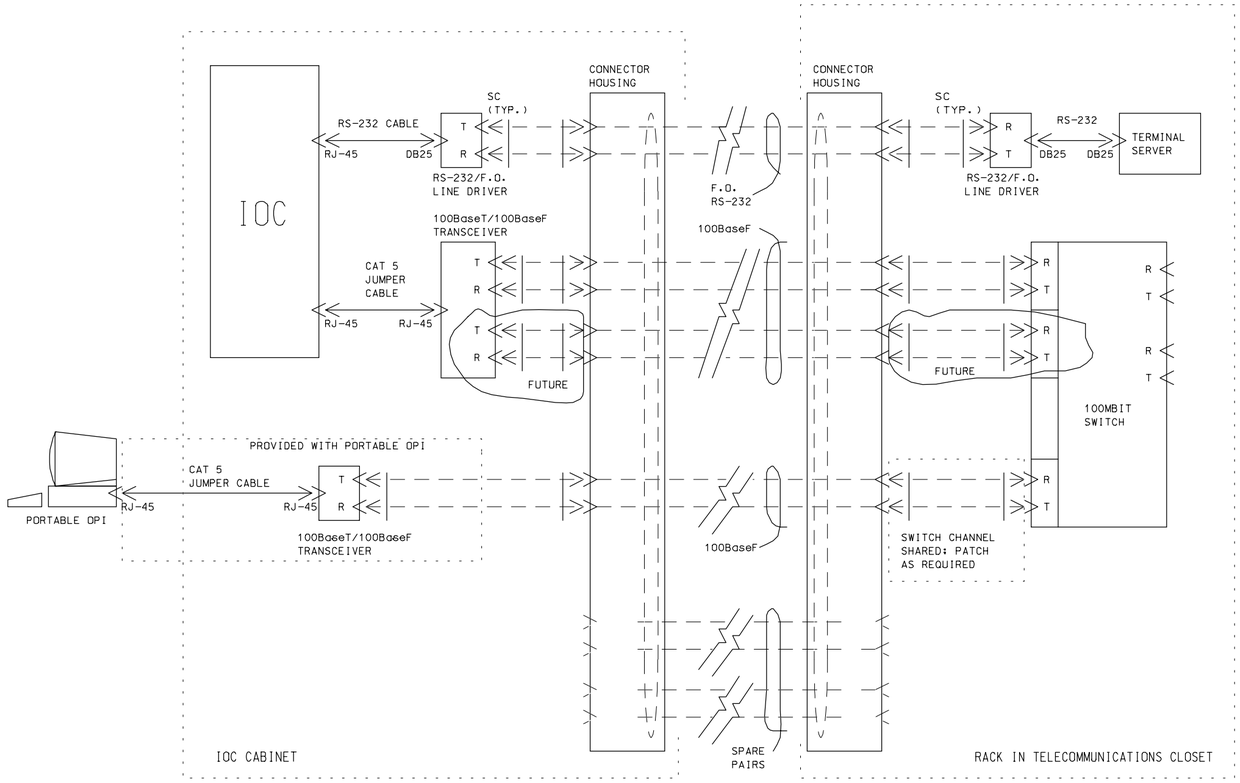

TYPICAL IOC FIBER OPTIC NETWORK CABLING

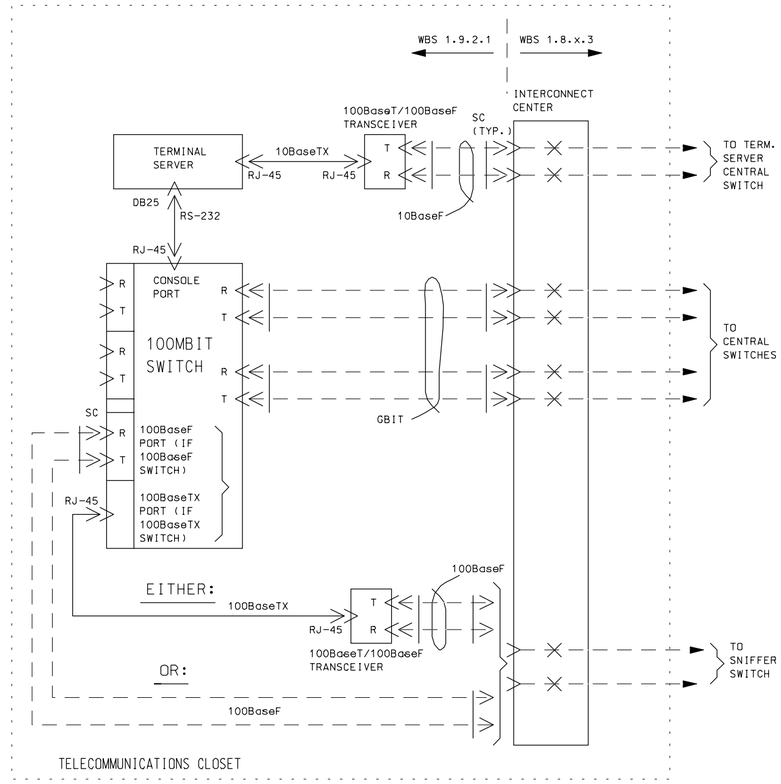

TYPICAL TELECOMMUNICATIONS CLOSET
BACKBONE INTERFACE CABLING (FOR ICS ONLY)

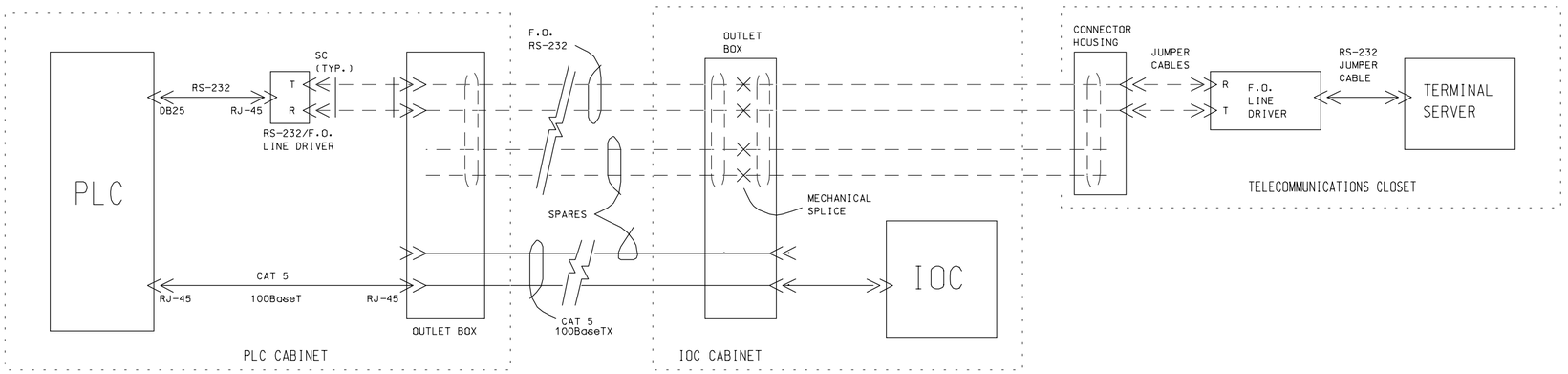

TYPICAL PLC NETWORK CABLING (WITH FIBER OPTIC RS-232 LINE DRIVER)

KEY:

— · — FIBER OPTIC

——— COPPER

8/27/99

NO REPRESENTATION OR WARRANTY, EXPRESSED OR IMPLIED, IS MADE AS TO THE ACCURACY, COMPLETENESS OR USEFULNESS OF THE INFORMATION OR STATEMENTS CONTAINED IN THESE DRAWINGS, OR THAT THE USE OR DISCLOSURE OF ANY INFORMATION, APPARATUS, METHOD, OR PROCESS DISCLOSED IN THESE DRAWINGS MAY NOT INFRINGE PRIVATE RIGHTS OF OTHERS. NO LIABILITY IS ASSUMED WITH RESPECT TO THE USE OF, OR FOR DAMAGES RESULTING FROM THE USE OF ANY INFORMATION, APPARATUS, METHOD, OR PROCESS DISCLOSED IN THESE DRAWINGS. DRAWINGS MADE AVAILABLE FOR INFORMATION TO BIDDER ARE NOT TO BE USED FOR OTHER PURPOSES AND ARE TO BE RETURNED UPON REQUEST OF THE FORWARDING CONTRACTOR.

NUMBER OF SECTION OR DETAIL — DRAWING ON WHICH SECTION OR DETAIL IS TAKEN — DRAWING ON WHICH SECTION OR DETAIL IS SHOWN

SECTION AND DETAIL KEY

THIS DOCUMENT CONTROLLED BY

CHANGE CONTROL SYSTEM _____

ENGINEERING PROCEDURE _____

REV	DESCRIPTION	BY	CHK	SECT

REVISION OR ISSUE PURPOSE

DEPT	DATE	PE	REQ	DATE	LMER	DATE	RPE	RPE NO	DATE

REVISION APPROVALS

ST	CV	EC	EE	EM	IE	M	PD	SE	AR

SQUAD CHECK

RPE

REV. DATE

DRAWING APPROVALS

DSGN
DRW
CHKR
SECT
DEPT
PE
PJ
REQ
LMER

LOCKHEED MARTIN

LOCKHEED MARTIN ENERGY RESEARCH CORP. managed for the DEPARTMENT OF ENERGY under U.S. GOVERNMENT contract DE-AC05-96OR22464
Oak Ridge National Laboratory • Oak Ridge, Tennessee

PROJECT NAME:

ICS NETWORK
TYPICAL F.O. COMM. DETAILS

1	48	49	50	PLANT	BLDG	FL	SH.	OF	TYPE	CLASS
51		52		53						REV

A

Border Date: Mar 2, '98