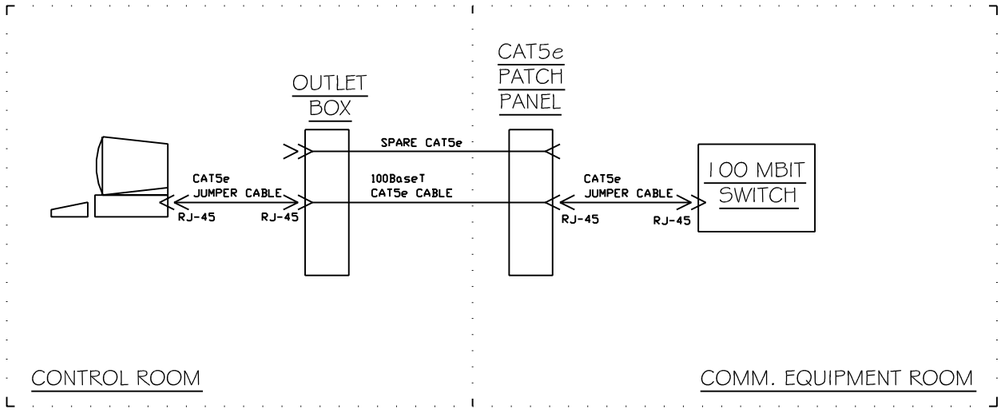

TYPICAL ICS COMPUTER EQUIPMENT CABLING
(BOOT SERVERS, OPIs, ETC.)

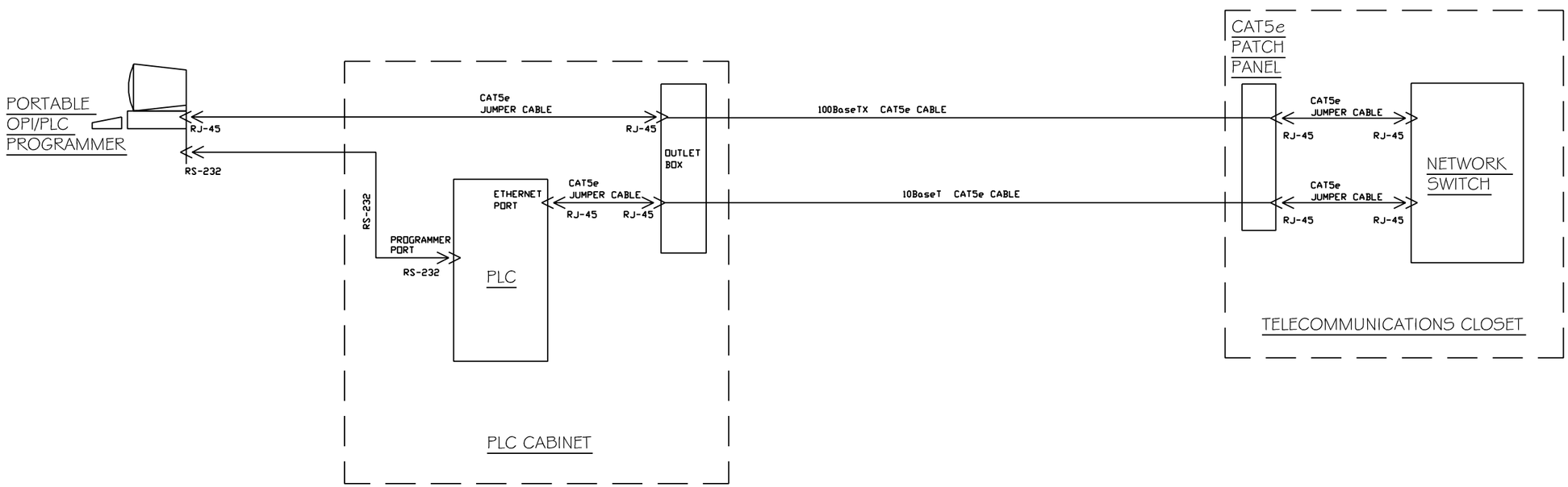

TYPICAL PLC NETWORK CABLING

KEY:

FIBER OPTIC

COPPER

07.31.01

REV	DESCRIPTION	BY	CHK	SECT	DEPT	DATE
0	ISSUED FOR APPROVAL	BD	---	---	---	07.09.01

REVISION OR ISSUE PURPOSE — REVISION APPROVALS

DRAWING APPROVALS		DATE
DES	BILL DEVAN	07.09.01
DWN	RICHARD EPPS	07.09.01
CHK		
L3TL		
LE		
STL		

Oak Ridge National Laboratory
operated for the DEPARTMENT OF ENERGY under US GOVERNMENT contract DE-AC-05-84OR21400
Oak Ridge, Tennessee

SNS Spallation Neutron Source

TYPICAL PLC & OPI NETWORK CABLING

DRAWING NUMBER: 109020100-R8D-8000-W002 REV: 0