Footprint of APW
Rack with 25"
(Nominal) Depth:

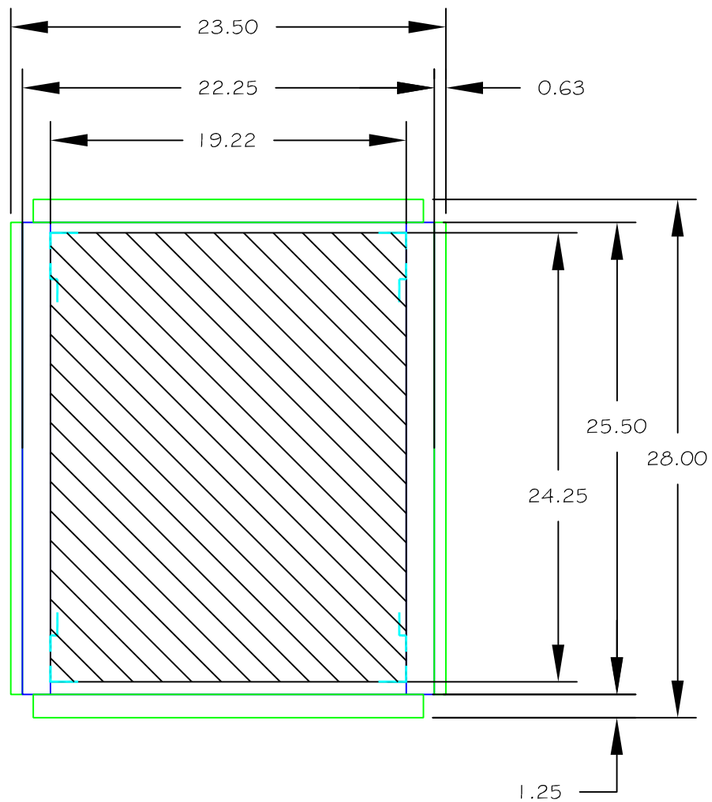

Footprint of APW
Rack with 30"
(Nominal) Depth:

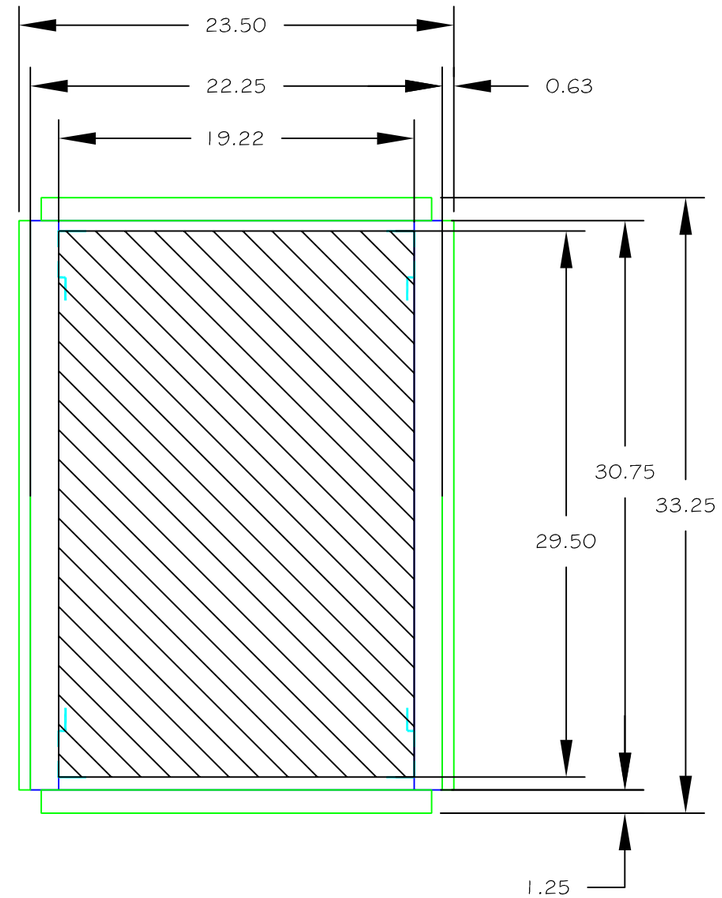

SCALE IN INCHES

08.10.01

							DES	BILL DEVAN	08.10.01	Oak Ridge National Laboratory
							DWN	RICHARD EPPS	08.10.01	SNS Spallation Neutron Source
							CHK			APW WRIGHT-LINE "VANTAGE" ENCLOSURES TOP VIEWS
							L3TL			
A	PRELIMINARY	BD	—	—	—	08.10.01	LE			
REV	DESCRIPTION	BY	CHK	SECT	DEPT	DATE	STL			DRAWING NUMBER for_Paul_Holik — REV A
REVISION OR ISSUE PURPOSE		REVISION APPROVALS					DRAWING APPROVALS		DATE	