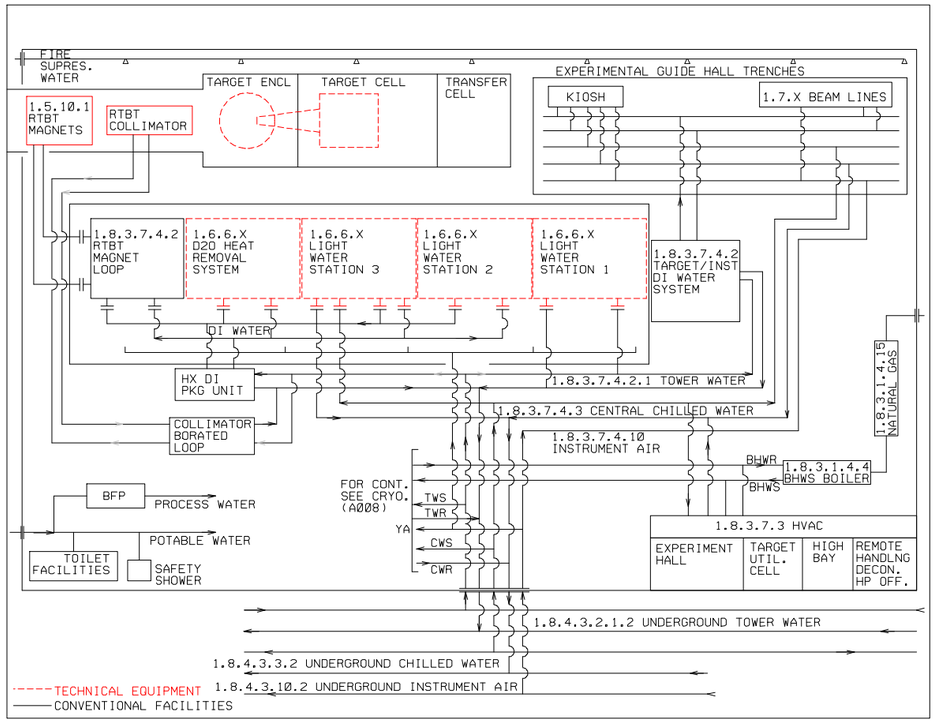

1.8.3.7 TARGET BUILDING
PIPING INTERFACE DIAGRAM

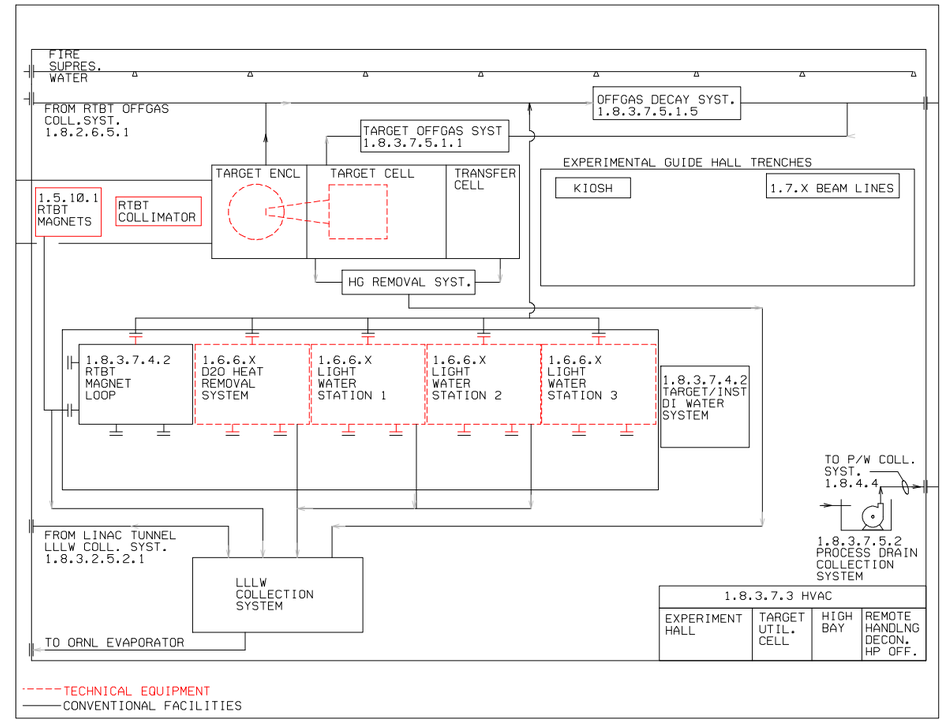

1.8.3.7 TARGET BUILDING
PIPING INTERFACE DIAGRAM

THIS DOCUMENT CONTROLLED BY
CHANGE CONTROL SYSTEM
ENGINEERING PROCEDURE

NO REPRESENTATION OR WARRANTY, EXPRESSED OR IMPLIED, IS MADE AS TO THE ACCURACY, COMPLETENESS OR USEFULNESS OF THE INFORMATION OR STATEMENTS CONTAINED IN THESE DRAWINGS, OR THAT THE USE OR DISCLOSURE OF ANY INFORMATION, APPARATUS, METHOD, OR PROCESS DISCLOSED IN THESE DRAWINGS MAY NOT INFRINGE PRIVATE RIGHTS OF OTHERS. NO LIABILITY IS ASSUMED WITH RESPECT TO THE USE OF, OR FOR DAMAGES RESULTING FROM THE USE OF ANY INFORMATION, APPARATUS, METHOD, OR PROCESS DISCLOSED IN THESE DRAWINGS. DRAWINGS MADE AVAILABLE FOR INFORMATION TO BIDDER ARE NOT TO BE USED FOR OTHER PURPOSES AND ARE TO BE RETURNED UPON REQUEST OF THE FORWARDING CONTRACTOR.

REV	CHANGE TYPE	CHANGE CONTROL SYSTEM	CHANGE REFERENCE NUMBER	DESCRIPTION	A-E	BY	CHK	SECT	DEPT	DATE	PE	REQ	LMER	DATE	RPE	RPE NO	CD	EC	EE	EM	IE	AR	REV.	DATE
				REVISION OR ISSUE PURPOSE			REVISION APPROVALS											SQUAD CHECK					DRAWING APPROVALS	

RPE
DSGN
DRW
CHKR
SECT
DEPT
PE
PJ
REQ
LMER
DATE

SPALLATION NEUTRON SOURCE

LOCKHEED MARTIN ENERGY RESEARCH CORP. managed for the DEPARTMENT OF ENERGY under U.S. GOVERNMENT contract DE-AC05-96OR22464
Oak Ridge National Laboratory • Oak Ridge, Tennessee

PROJECT NAME:
SNS CONVENTIONAL FACILITIES

CONV. FAC. (WBS 1.08.03.14)
PIPING INTERFACE DIAGRAMS
TARGET BUILDING

1	48	49	50	51	52	PLANT	BLDG	FL	SH	OF	TYPE	CLASS
53	108030700 J8C8000A007											REV 0

108030700 J8C8000A007

Seed Date: Aug 18, '98
Border Date: May 3, '99

8/18/99